Positronic®

an **Amphenol** company

Standard Density

Rectangular Connectors

For Direct Current, Low Frequency Analog and Digital High Speed Data Applications

POSITRONIC INDUSTRIES RoHS Compliant Per EU Directive 2002/95/EC

RoHS Compliant options available!

Catalog C-009 Rev. D5

Positronic®

About Us

Founded in 1966, Positronic Industries is a vertically integrated manufacturer of high quality interconnect products. Positronic has earned the worldwide reputation as a service oriented, quick-reaction, top quality connector supplier. We are committed to maintaining this reputation by continuous implementation of our **Complete Capability** concept.

Complete Capability


Machining

Design & Development

- Designs new connectors and modifies existing connectors to meet industry requirements
- Continuously conducts marketing studies to identify industry needs for new products
- Ongoing interest in unique connector designs

Tooling

- Tooling support for all manufacturing areas within company
- Provides 80% of new tooling, punch press dies, molds, jigs and fixtures used at Positronic factory locations worldwide

Machining

- Automatic screw machines produce finely crafted contacts and hardware for connector bodies
- Trained technicians operate machines from Tornos, Bechler and Brown & Sharpe


Molding

Molding

- Molds all plastic connector components such as insulators, hoods, angle brackets and more
- Overmold capability available

Plating

- Applies gold and other metal finishes to connector components to any required thickness
- Plating conforms to all military specifications


Finished Stock Inventory

Quality Assurance

- Select factories certified to ISO 9001:2000, AS9100 Rev.B 2004 and ISO 14001 (Singapore)
- Maintains aggressive TQM program
- Able to test to IEC, EIA, UL, MIL-DTL-24308, MIL-DTL-28748, SAE AS 39029 and MIL-C-85049 requirements

Finished Stock Inventory

- Same day shipments available from PosiShop on many standard connector products
- Stocking agreements available for qualified customers

Worldwide Sales & Service

- Responsive attitude toward customer needs
- Fully trained sales staff located worldwide
- Facilities located in USA, France, India, Puerto Rico, and Singapore.

Products described within this catalog may be protected by one or more of the following US. patents:

#4,900,261 #5,255,580 #5,329,697
#6,260,268 #6,835,079 #7,115,002

Patented in Canada, 1992 Other Patents Pending

Unless otherwise specified, **dimensional tolerances** are:

1) **±0.001 inches [0.03 mm] for male contact mating diameters.**
2) **±0.003 inches [0.08 mm] for contact termination diameters.**
3) **±0.005 inches [0.13 mm] for all other diameters.**
4) **±0.015 inches [0.38 mm] for all other dimensions.**

Positronic Industries' FEDERAL SUPPLY CODE (Cage Code) FOR MANUFACTURERS is 28198

POSITRONIC IS AN ITAR REGISTERED COMPANY

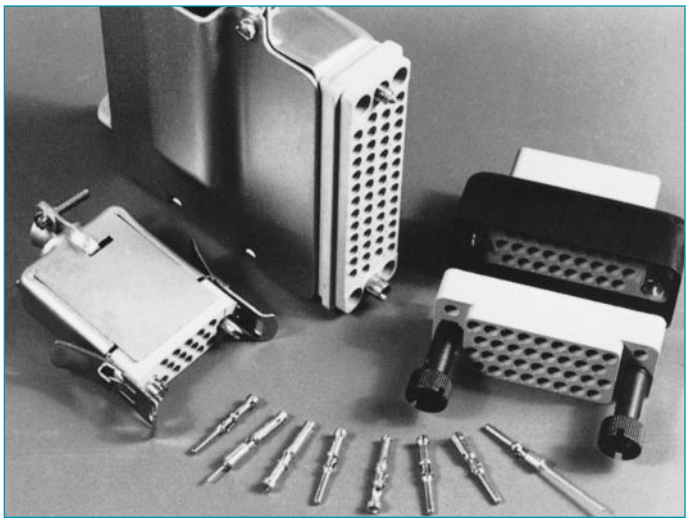

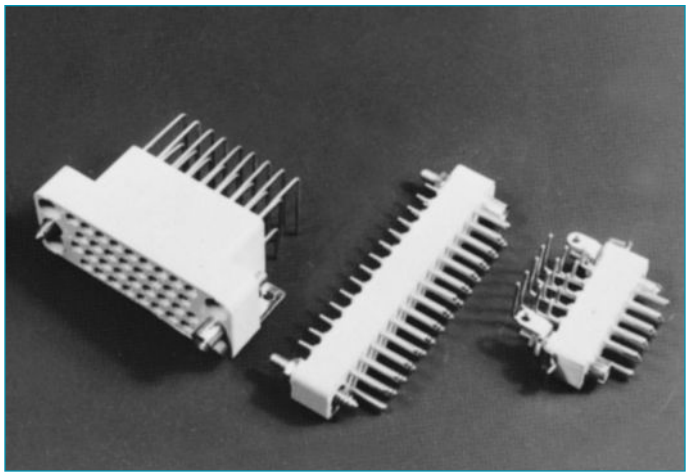

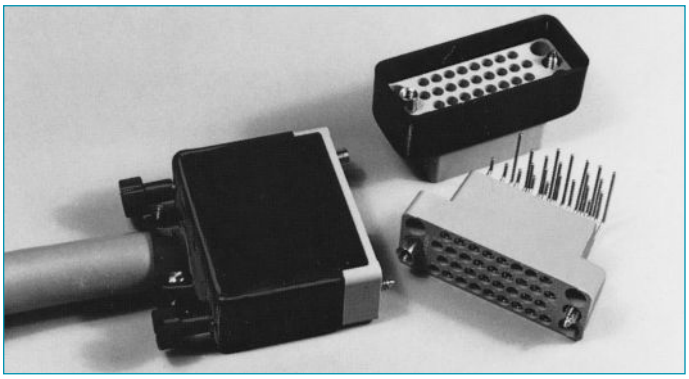

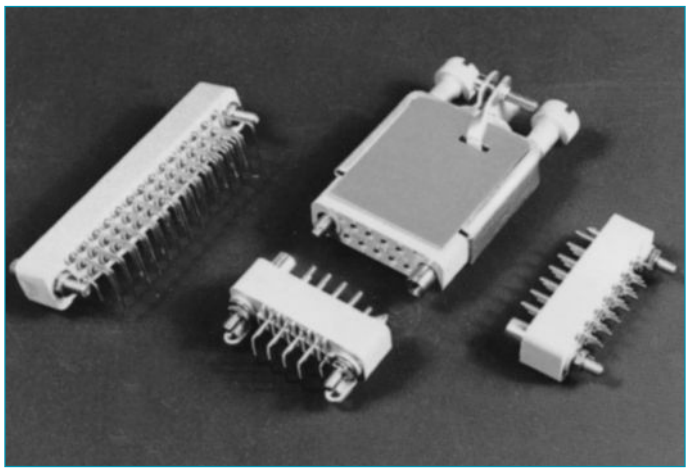

CONNECTOR DESCRIPTIONS

GMCT SERIES CONNECTORS

Heavy duty, rectangular connectors with removable contacts. Multipurpose connectors offering power, signal and shielded contacts. Thirteen connector variants, 9 through 104 poles, qualified to MIL-DTL-28748.

GMCT SERIES CONTACTS

Size 16 contacts, 13 ampere nominal rated, and size 20 contacts, 7.5 ampere nominal rated, qualified to SAE AS 39029. Terminations are crimp 14 AWG [2.5mm^2] through 32 AWG [0.03mm^2], solder cup, printed board, press-fit and shielded.

GAP SERIES CONNECTORS

Heavy duty, rectangular, printed board connectors with straight solder, size 16 contacts, 7.5 ampere nominal rated. Eight connector variants, 9 through 50 poles.

GAPL SERIES CONNECTORS

Heavy duty, rectangular, printed board mount connectors with size 16, right angle solder cup contacts, 7.5 ampere nominal rated. Seven connector variants, 9 through 50 poles.

VMCT AND VAPL SERIES CONNECTORS

Heavy duty, rectangular, CCITT V.35 recommended interface connectors with size 16 contacts, 13 ampere nominal rated. Terminations are crimp, solder cup, right angle printed board mount and press-fit.

GM SERIES CONNECTORS

Rectangular connectors with size 20 fixed solder contacts, 7.5 ampere nominal rated. Solder cup and printed board terminations. Eleven connector variants, 7 through 50 poles. Qualified to MIL-DTL-28748.

POSITRONIC INDUSTRIES RoHS Compliant per EU Directive 2002/95/EC

RoHS Compliant options available!

Positronic Industries
connectpositronic.com

TABLE OF CONTENTS

Standard
Density
Rectangular

G M C T S E R I E S

G A P S E R I E S

G A P L S E R I E S

V . 3 5 S E R I E S

DIMENSIONS ARE IN INCHES [MILLIMETERS].
ALL DIMENSIONS ARE SUBJECT TO CHANGE.

G M S E R I E S

A C C E S S O R I E S

G R O U N D I N G P L A T E S

Q. P. L. L I S T I N G

Positronic Industries
connectpositronic.com

HEAVY-DUTY RECTANGULAR CONNECTORS WITH REMOVABLE CONTACTS

Standard
Density
Rectangular

Size 16 and 20 Contacts

Connectors Qualified to MIL-DTL-28748

Contacts Qualified to SAE AS 39029

IEC Publication 807-7

U.L. Recognized, File #E49351

Telecommunication U.L. File #E140980

GMCT Series connectors are heavy-duty, multi-pole, high reliability connectors qualified to MIL-DTL-28748 specifications. Termination styles are crimp, solder cup, straight solder, press-fit, and crimp shielded. According to contact size selected, GMCT Series connectors are intermateable with Positronic GAP and GAPL series connectors.

Thirteen contact variants, 9 through 104 poles, are offered. Contacts can have 0.062 inch [1.57mm] diameters, rated to 13 amperes per contact, or have 0.040 inch [1.02mm] diameters, rated to 7.5 amperes per contact. GMCT Series crimp contacts are qualified to SAE AS 39029.

A wide array of mounting, locking, shrouding and polarizing accessories is available for this series. For details, see the Heavy-Duty Rectangular Connector Accessories section.

Due to its many termination styles, its wide range of contact variants, and an array of cable support accessories, GMCT Series connectors are widely utilized in navigational systems, robotics, mainframe and peripheral computers, medical equipment, telecommunications, instrumentation and process control applications.

GMCT SERIES TECHNICAL CHARACTERISTICS

MILITARY SPECIFICATIONS:

Qualified to MIL-DTL-28748/3 and MIL-DTL-28748/4. Contacts qualified to SAE AS 39029/34 and SAE AS 39029/35.

UNDERWRITERS LABORATORY RECOGNIZED:

File No. E49351.

INTERNATIONAL STANDARDS:

IEC 807-7.
U.L. Recognized.

MATERIALS AND FINISHES:

Insulator: Glass filled DAP per ASTM-D-5948 type SDG-F. Grey color is standard, black available. Size 66 insulators are black PPS

Removable Contacts: Copper alloy, gold flash over nickel. Military contacts plated 0.000050 inch [1.27 microns] gold over copper. Other finishes available upon request.

Hoods, Cable Adapters: Aluminum with yellow or black anodize.

Shells: Aluminum with yellow or black anodize.

Jackscrew System: Passivated stainless steel.

Polarizing Guides: Copper alloy with nickel plate or passivated stainless steel.

Vibration Locks: Copper alloy with zinc plate and chromate seal.

MECHANICAL CHARACTERISTICS:

Removable Contacts: Insert contact to rear face of insulator, release from front face of insulator. Both size 16 [13 amps] and size 20 [7.5 amps] contacts available. Female contact has "closed entry" design for highest reliability.

Contact Retention in Insulator: 20 lbs. [89N] after 10 cycles of contact insertion/extraction.

Contact Termination: Crimp all wire sizes from 14 AWG [2.5 mm²] through 28 AWG [0.08 mm²]. Also, solder cup, press-fit, and solder printed board terminations. Also, crimp and shielded contacts.

Locking Systems: Friction, vibration locks and jackscrews.

Polarization: Polarized guides, polarized shells and jackscrew system.

Mechanical Operations: 1000 operations per IEC 512-5.

Jackscrews: Standard threads, 6-32 UNC on all sizes, except 60 and 104 connector variant, which uses 8-32 UNC. Metric threads, M3X0.5 available.

ELECTRICAL CHARACTERISTICS:

Contact Current Rating (maximum): Size 16: 0.062 inch [1.57 mm] diameter. - 13 amps maximum.
Size 20: 0.040 inch [1.02 mm] diameter. - 7.5 amps maximum.

Initial Contact Resistance: Size 16 – 0.003 ohms.
Size 20 – 0.007 ohms.

Flash over Voltage: 2700 V.AC [rms].

Test Voltage: Size 16 - 2000 V.AC [rms].
Size 20 - 1200 V.AC [rms].

Insulation Resistance (minimum): 5 G ohms.

Clearance and Creepage Distance (minimum): 0.080 inch [2.03 mm].

Working Temperature: -65°C to 150°C.

Working Voltage: 500 V.AC [rms].

Coaxial Contacts:
Characteristic Impedance: 50 ohms.
Initial Contact Resistance: 0.012 ohms max.

POSITRONIC INDUSTRIES RoHS Compliant per EU Directive 2002/95/EC

For RoHS options see page 21.

TYPICAL MATING ASSEMBLIES

PICTURES ARE 80% OF ACTUAL SIZE

GMCT26F0E100JB

GAP26MDS4T0000

GMCT34F00RAZ0

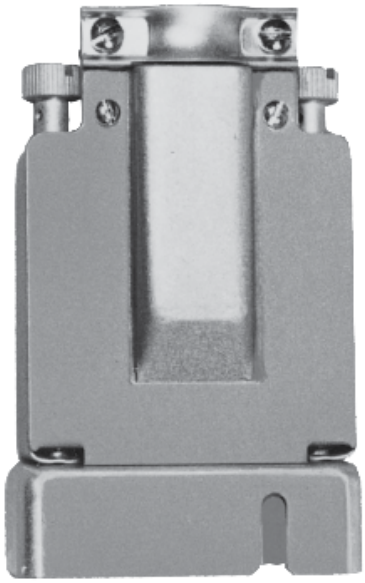

GMCT34M0TWA00

CONNECTOR MATING DIMENSIONS

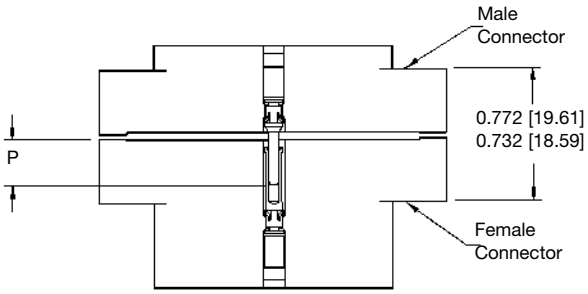

INSULATORS

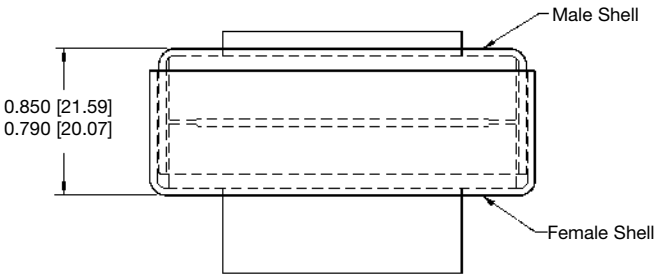

PROTECTIVE SHELLS

P: 0.276 [7.01] MINIMUM PENETRATION OF MALE CONTACT IN "CLOSED ENTRY" DESIGN FEMALE CONTACT TO ENSURE MINIMUM CONTACT RESISTANCE.

Positronic Industries
connectpositronic.com

HEAVY-DUTY RECTANGULAR CONNECTORS WITH REMOVABLE CONTACTS

Standard
Density
Rectangular

EXPLODED VIEWS OF TYPICAL MATED CONNECTOR ASSEMBLIES

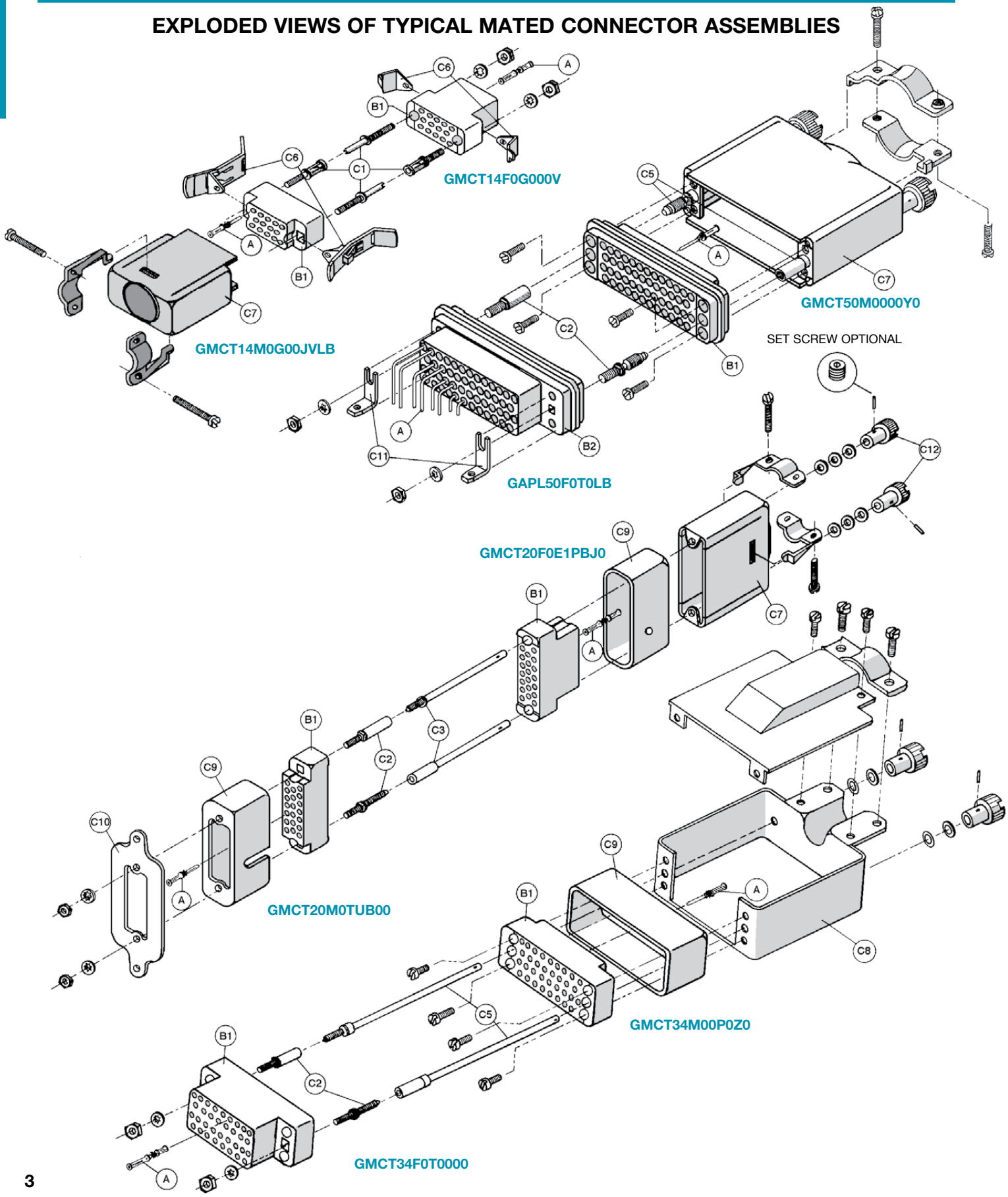

HEAVY-DUTY RECTANGULAR CONNECTORS WITH REMOVABLE CONTACTS

CONNECTOR COMPONENT DESCRIPTION AND TERMINOLOGY

A - Male and female contacts, size 16 and size 20. Power, signal and shielded. Terminations are crimp, solder cup, printed board straight solder and press-fit.

B1 - Unloaded connector insulators, male and female. Insulator retention system retains all contact termination types. Insulator may be used as a free or fixed connector.

B2 - Loaded connector insulators, male and female. Insulators may be preloaded per customer requirements with contacts having terminations of 90° or straight solder printed board mount, and press-fit. Insulator contact positions may be selectively loaded with contacts. Unloaded insulator contact positions remain unloaded and reserved for future use. Connectors are normally fixed panel or printed board connectors.

C1 - Polarizing guides, male and female, ensure correct alignment and coupling of male and female connectors. They may also be used for keying when used in corner positions of connector variants 34, 42, 50, 60, 66, 75 and 104 poles.

C2 - Fixed jackscrews are the stationary threaded members of the jackscrew system. Threaded pilots and sockets of the jackscrew system also provide connector polarization to ensure correct connector coupling.

C3 - Long turnable jackscrews, the rotating threaded members of the jackscrew system, are used with a free connector having a hood for cable support. Used on connector variants 9, 14, 18, 20, 21, 26 and 41 poles. Knobs, C-12, may be affixed to turnable jackscrews using either roll pins or set screws.

C4 - Short turnable jackscrews are used to polarize and mechanically assist with the coupling of the male and female connectors when the free connector is not equipped with a hood.

C5 - Long turnable jackscrews, factory assembled to hood (cable adapter) for polarization and mechanical assistance in the coupling of the free connector to the fixed connector. Used on connector variants with 34, 42, 50, 60, 66, 75 and 104 poles.

C6 - Vibration locking system consists of lock tabs on fixed connector and locking levers on free cable connectors. Normally used on connector variants 7, 9, 14, 18, 20, 21 and 26 poles. Locks connectors in coupled position.

C7 - Hoods (cable adapters) are used on the free connector to provide cable support and contact protection. May also mechanically support either the turnable or fixed members of the jackscrew system.

C8 - Side access hoods (cable adapters). Extra strength, quick cable assembly to connector, fixed or free, to provide cable support and relieve stress on contact termination. Supplied with both turnable and fixed jackscrew systems.

C9 - Shells (shrouds), both male and female, protect male and female contacts from damage. Also used to provide additional polarization combinations.

C10 - Mounting plates, with or without float bushings, provide a stronger mechanical method of mounting the fixed connector to a panel. May be used with shells.

C11 - Mounting angle brackets provide a means of mechanically affixing the fixed connector to the printed board.

C12 - Knobs of turnable jackscrews may be affixed to the jackscrews by using either the roll pin or set screw method. Specify method desired in step 9 of order numbering system.

INSULATOR DIMENSIONS

MATING FACE OF FEMALE CONNECTOR OR REAR FACE OF MALE CONNECTOR

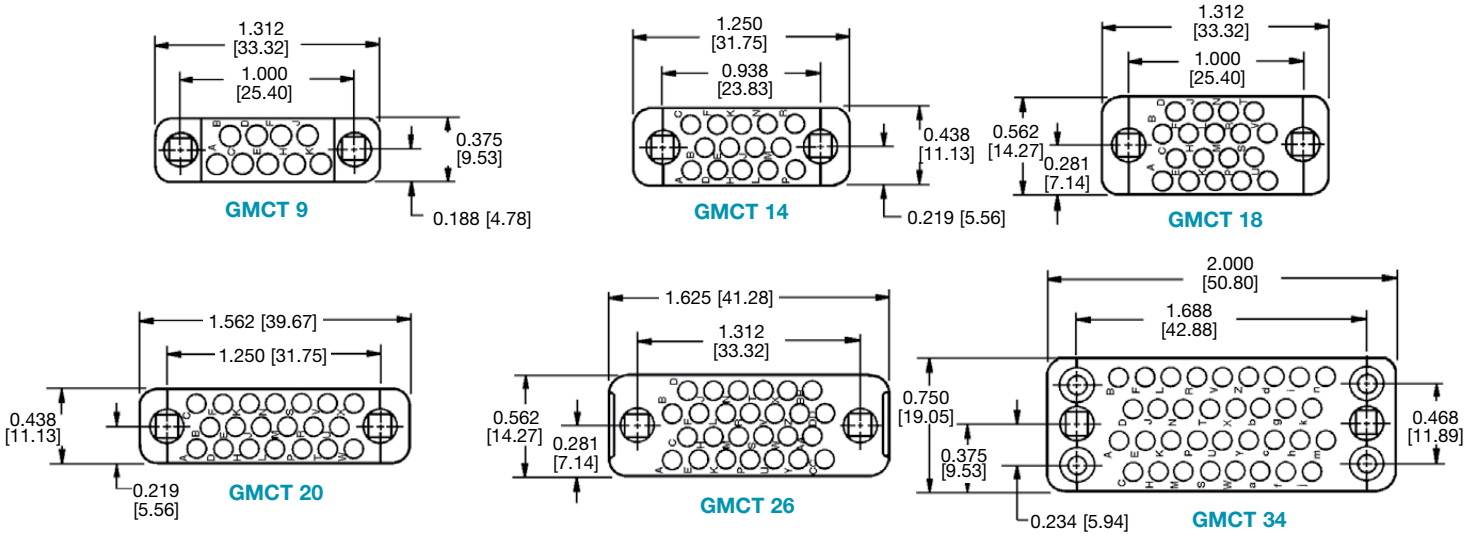

DIMENSIONS ARE IN INCHES [MILLIMETERS].
ALL DIMENSIONS ARE SUBJECT TO CHANGE.

Positronic Industries
connectpositronic.com

HEAVY-DUTY RECTANGULAR CONNECTORS WITH REMOVABLE CONTACTS

Standard
Density
Rectangular

INSULATOR DIMENSIONS

MATING FACE OF FEMALE CONNECTOR OR REAR FACE OF MALE CONNECTOR

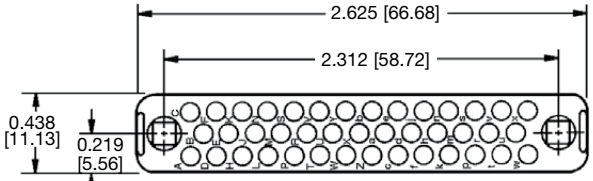

GMCT 41

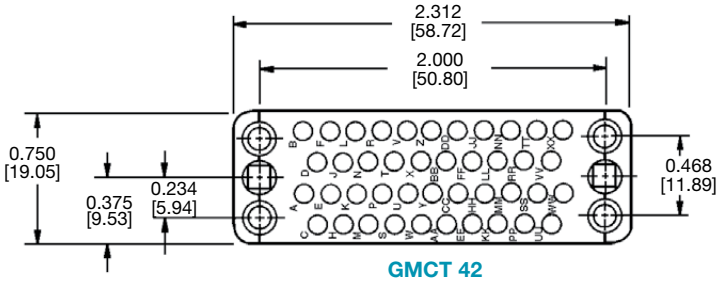

GMCT 42

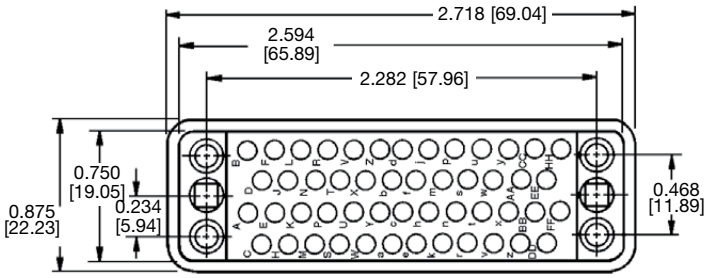

GMCT 50

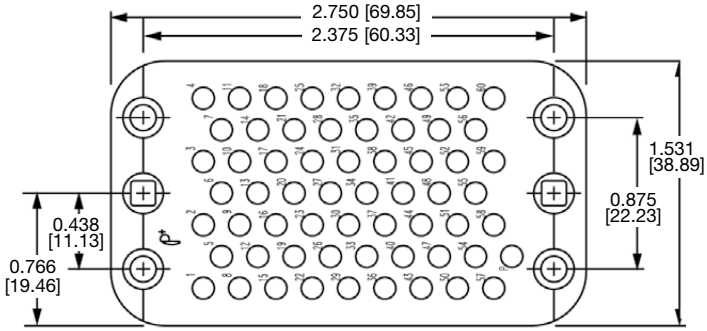

GMCT 60*

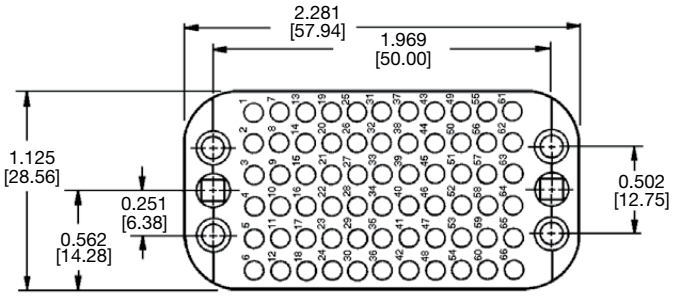

GMCT 66*[1]

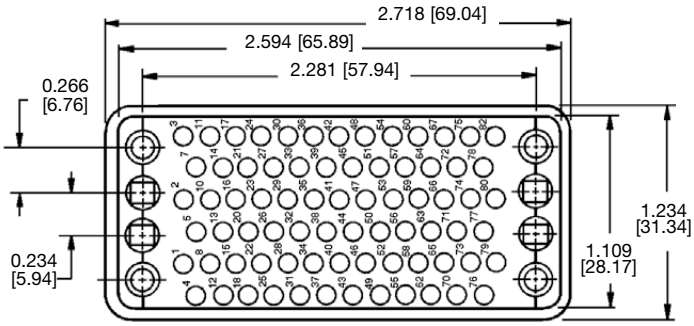

GMCT 75

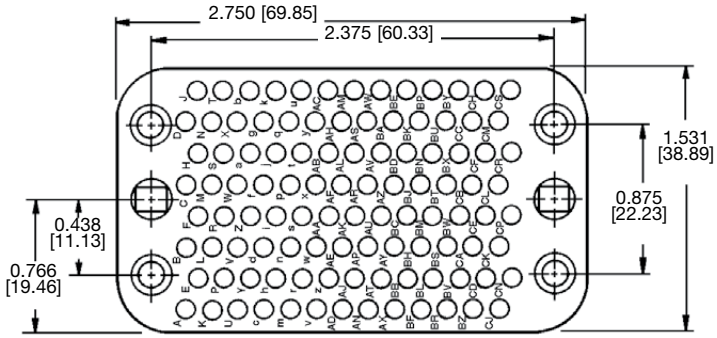

GMCT 104

***CONTACT TECHNICAL SALES FOR U.L. APPROVAL STATUS OF GMCT60 VARIANT.**

MATERIAL: GLASS FILLED DIALLYL PHTHALATE PER ASTM-D-5948 TYPE SDG-F
***[1]Size 66 insulators are black PPS**

SEE GMCT SERIES PRINTED BOARD HOLE PATTERN PAGE FOR CONNECTOR VARIANT CONTACT HOLE POSITIONS

DIMENSIONS ARE IN INCHES [MILLIMETERS].
ALL DIMENSIONS ARE SUBJECT TO CHANGE.

HEAVY-DUTY RECTANGULAR CONNECTORS WITH REMOVABLE CONTACTS

INSULATOR DIMENSIONS

FIGURE 1

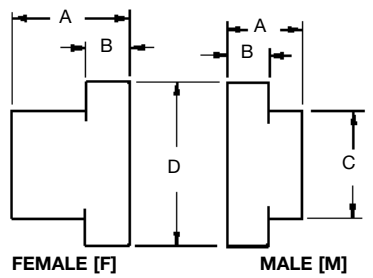

FIGURE 2

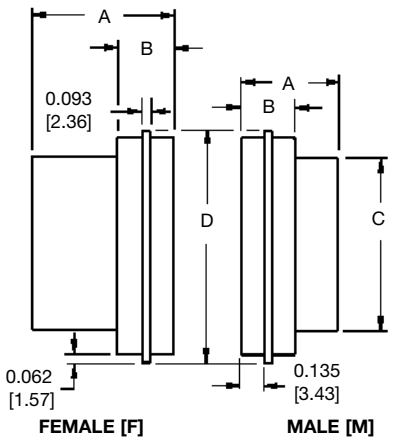

CATALOG NUMBER	FIGURE	A	B	C	D
GMCT9F	1	0.856 [21.74]	0.370 [9.40]	0.810 [20.57]	1.312 [33.32]
GMCT9M	1	0.511 [12.98]	0.370 [9.40]	0.810 [20.57]	1.312 [33.32]
GMCT14F	1	0.856 [21.74]	0.370 [9.40]	0.778 [19.76]	1.250 [31.75]
GMCT14M	1	0.511 [12.98]	0.370 [9.40]	0.778 [19.76]	1.250 [31.75]
GMCT18F	1	0.856 [21.74]	0.370 [9.40]	0.772 [19.61]	1.312 [33.32]
GMCT18M	1	0.511 [12.98]	0.370 [9.40]	0.772 [19.61]	1.312 [33.32]
GMCT20F	1	0.856 [21.74]	0.370 [9.40]	1.072 [27.23]	1.562 [39.67]
GMCT20M	1	0.511 [12.98]	0.370 [9.40]	1.072 [27.23]	1.562 [39.67]
GMCT26F	1	0.856 [21.74]	0.370 [9.40]	1.072 [27.23]	1.625 [41.28]
GMCT26M	1	0.511 [12.98]	0.370 [9.40]	1.072 [27.23]	1.625 [41.28]
GMCT34F	1	0.856 [21.74]	0.370 [9.40]	1.375 [34.93]	2.000 [50.80]
GMCT34M	1	0.511 [12.98]	0.370 [9.40]	1.375 [34.93]	2.000 [50.80]
GMCT41F	1	0.856 [21.74]	0.370 [9.40]	2.125 [53.98]	2.625 [66.68]
GMCT41M	1	0.511 [12.98]	0.370 [9.40]	2.125 [53.98]	2.625 [66.68]
GMCT42F	1	0.866 [22.00]	0.370 [9.40]	1.672 [42.47]	2.312 [58.72]
GMCT42M	1	0.525 [13.34]	0.370 [9.40]	1.672 [42.47]	2.312 [58.72]
GMCT50F	2	0.856 [21.74]	0.370 [9.40]	1.972 [50.09]	2.718 [69.04]
GMCT50M	2	0.511 [12.98]	0.370 [9.40]	1.972 [50.09]	2.718 [69.04]
GMCT60F	1	0.856 [21.74]	0.370 [9.40]	2.048 [52.02]	2.750 [69.85]
GMCT60M	1	0.511 [12.98]	0.370 [9.40]	2.048 [52.02]	2.750 [69.85]
GMCT66F*1	1	0.856 [21.74]	0.370 [9.40]	1.673 [42.49]	2.281 [57.94]
GMCT66M*1	1	0.525 [13.34]	0.370 [9.40]	1.673 [42.49]	2.281 [57.94]
GMCT75F	2	0.856 [21.74]	0.370 [9.40]	1.980 [50.29]	2.718 [69.04]
GMCT75M	2	0.511 [12.98]	0.370 [9.40]	1.980 [50.29]	2.718 [69.04]
GMCT104F	1	0.856 [21.74]	0.370 [9.40]	2.048 [52.02]	2.750 [69.85]
GMCT104M	1	0.511 [12.98]	0.370 [9.40]	2.048 [52.02]	2.750 [69.85]

*1 Size 66 insulators are black PPS

DIMENSIONS ARE IN INCHES [MILLIMETERS].
ALL DIMENSIONS ARE SUBJECT TO CHANGE.

Positronic Industries
connectpositronic.com

HEAVY-DUTY RECTANGULAR CONNECTORS WITH REMOVABLE CONTACTS

Standard
Density
Rectangular

CONTACT HOLE POSITION DIMENSIONS AND PRINTED BOARD HOLE PATTERN

FOR STRAIGHT SOLDER CONTACTS AND COMPLIANT TERMINATION PRESS-FIT CONTACTS
MATING FACE OF FEMALE CONNECTOR OR REAR FACE OF MALE CONNECTOR

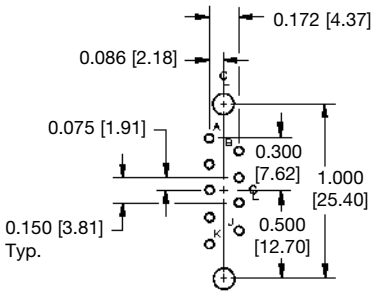

SIZE 9

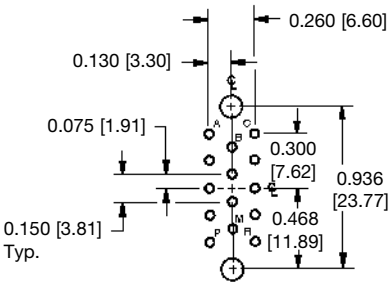

SIZE 14

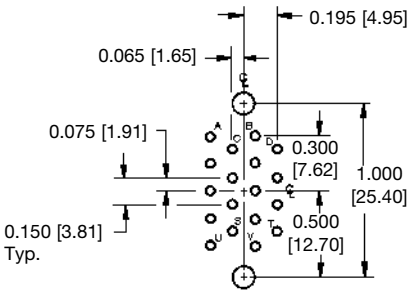

SIZE 18

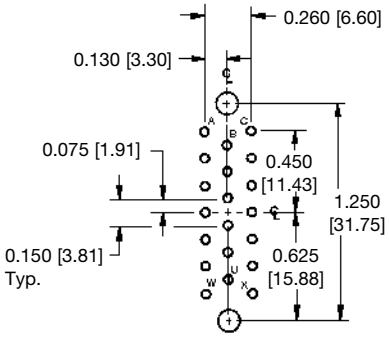

SIZE 20

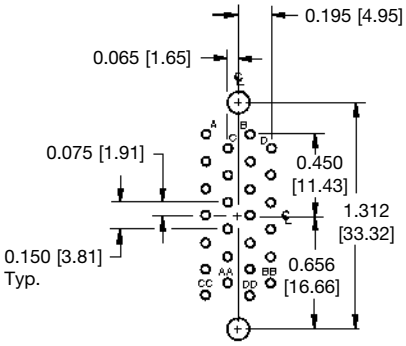

SIZE 26

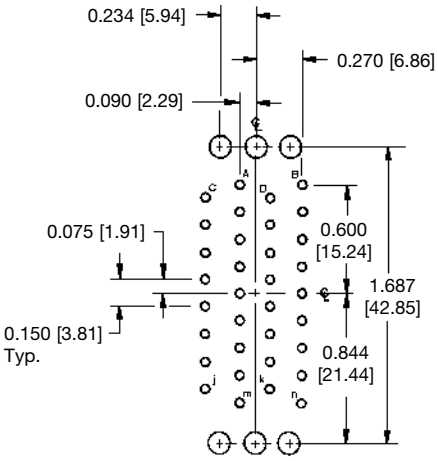

SIZE 34

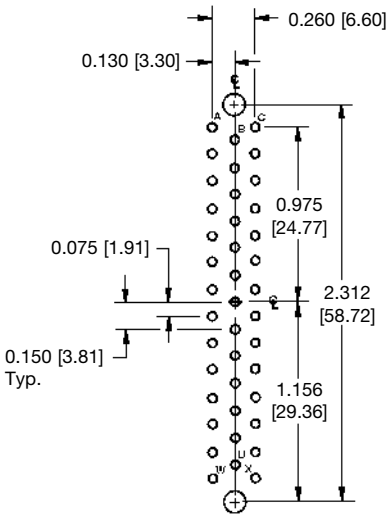

SIZE 41

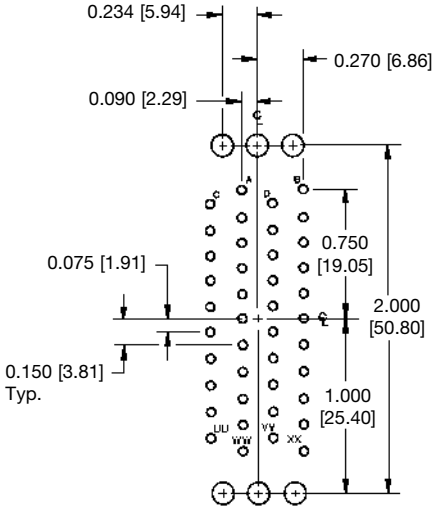

SIZE 42

HOLE IDENTIFICATION FOR REFERENCE ONLY

SUGGEST 0.120 [3.05] Ø HOLES IN PRINTED BOARD FOR CONNECTOR MOUNTING HOLES FOR CONNECTOR VARIANTS 9 THROUGH 50, 66 AND 75. SUGGEST 0.149 [3.78] Ø HOLES IN PRINTED BOARD FOR CONNECTOR MOUNTING HOLES FOR CONNECTOR VARIANTS 60 AND 104.

SUGGEST 0.040 [1.02] Ø HOLES IN PRINTED BOARD FOR GMCT SERIES STRAIGHT SOLDER CONTACTS

SUGGESTED PRINTED BOARD HOLE SIZES FOR COMPLIANT TERMINATION PRESS-FIT CONTACTS, SEE PAGE 13.

DIMENSIONS ARE IN INCHES [MILLIMETERS].
ALL DIMENSIONS ARE SUBJECT TO CHANGE.

CONTACT HOLE POSITION DIMENSIONS AND PRINTED BOARD HOLE PATTERN

FOR STRAIGHT SOLDER CONTACTS AND COMPLIANT TERMINATION PRESS-FIT CONTACTS
MATING FACE OF FEMALE CONNECTOR OR REAR FACE OF MALE CONNECTOR

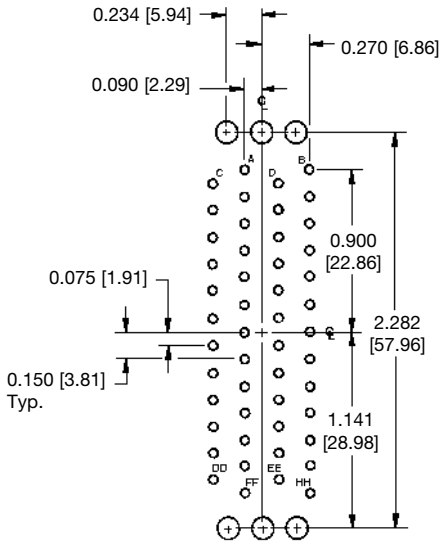

SIZE 50

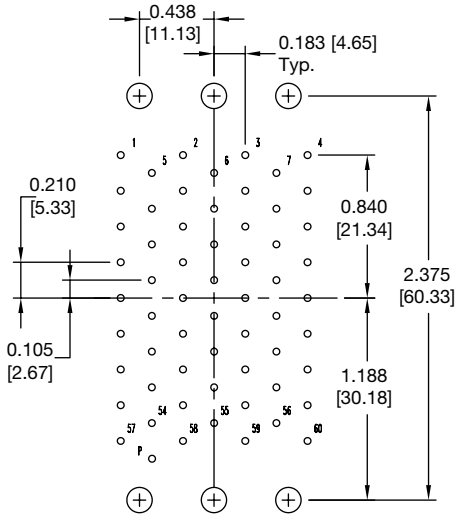

SIZE 60

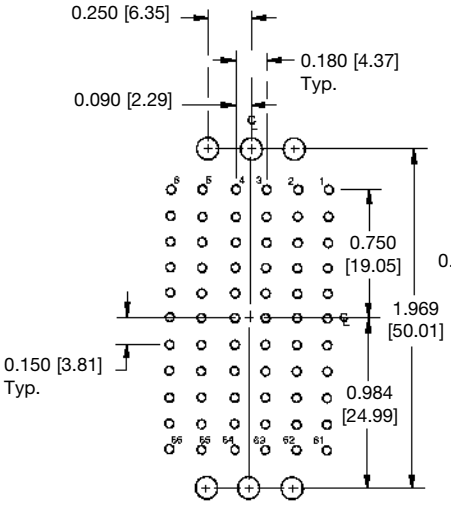

SIZE 66

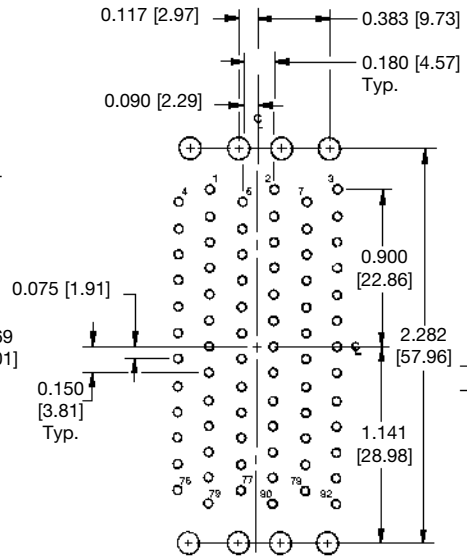

SIZE 75

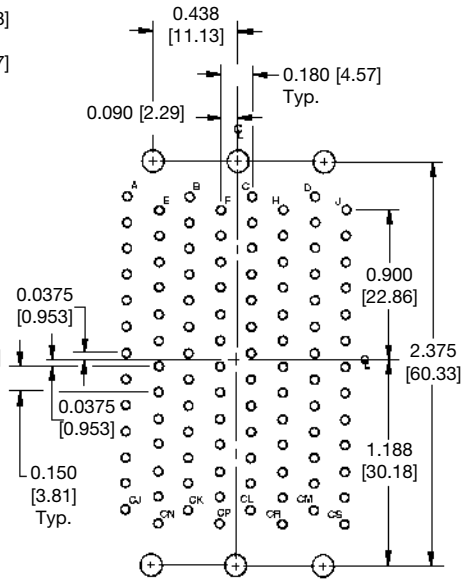

SIZE 104

HOLE IDENTIFICATION FOR REFERENCE ONLY

SUGGEST 0.120 [3.05] Ø HOLES IN PRINTED BOARD FOR CONNECTOR MOUNTING HOLES FOR CONNECTOR VARIANTS 9 THROUGH 50, 66 AND 75. SUGGEST 0.149 [3.78] Ø HOLES IN PRINTED BOARD FOR CONNECTOR MOUNTING HOLES FOR CONNECTOR VARIANTS 60 AND 104.

SUGGEST 0.040 [1.02] Ø HOLES IN PRINTED BOARD FOR GMCT SERIES STRAIGHT SOLDER CONTACTS

SUGGESTED PRINTED BOARD HOLE SIZES FOR COMPLIANT TERMINATION PRESS-FIT CONTACTS, SEE PAGE 13.

DIMENSIONS ARE IN INCHES [MILLIMETERS].
ALL DIMENSIONS ARE SUBJECT TO CHANGE.

Positronic Industries
connectpositronic.com

HEAVY-DUTY RECTANGULAR CONNECTORS WITH REMOVABLE CONTACTS

Standard
Density
Rectangular

"LARGE SURFACE AREA CONTACT MATING SYSTEM"
HIGH RELIABILITY "CLOSED ENTRY" DESIGN

PRECISION MACHINED, SOLID COPPER ALLOY

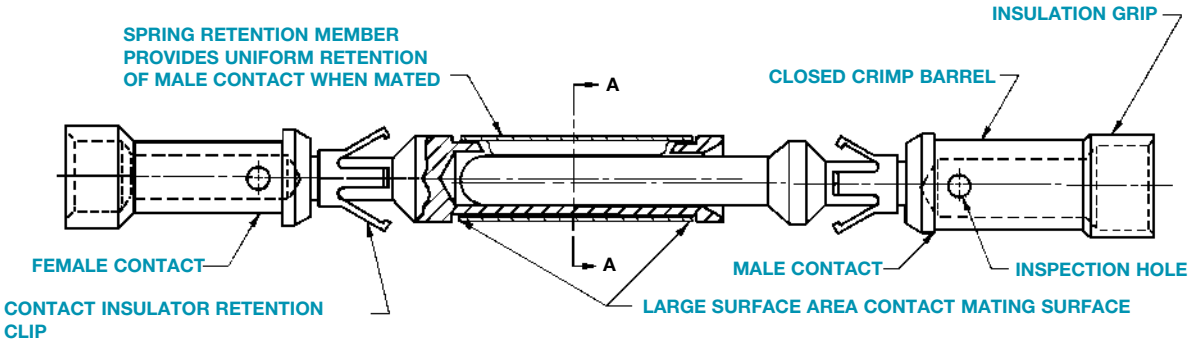

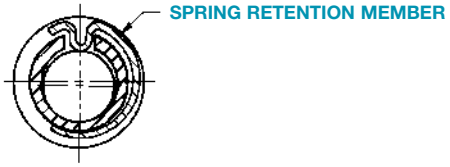

SECTION A-A
ENLARGED

All contacts of the GMCT series connector family utilize the "Large Surface Area (L.S.A.) Contact Mating System." The "L.S.A. Contact Mating System" insures the lowest level of contact resistance during mechanical endurance tests of 1000 coupling cycles or more. Contact insertion/withdrawal forces remain substantially the same during the life of the connector.

† The GMCT series uses only "Closed Entry" design female contacts. The "Closed Entry" design prevents probe damage to the female contacts, and will not allow the female contact to accept misaligned or bent male contacts.

† All GMCT series contacts are precision machined from solid, copper alloy barstock. They are durable, smooth in construction, and have greater amperage capacities than hollow, sheet metal style contacts. This is graphically illustrated by the amperage-temperature rise curves developed for the 34 pole GMCT insulator using 16 AWG [1.5 mm^2] wire [see diagram page 10]. The precision machined, removable contact also has a more durable insulator retention system than the hollow, sheet metal style contact. After ten removal cycles from its insulator, the precision machined contact will withstand axial forces in excess of 20 lbs. [89N]. In comparison, the hollow, sheet metal style contact is limited to 10 lbs. [44.5N] after ten removal cycles from its insulator retention system.

DIMENSIONS ARE IN INCHES [MILLIMETERS].
ALL DIMENSIONS ARE SUBJECT TO CHANGE.

CURRENT-TEMPERATURE DERATING CURVE

(TESTED PER IEC PUBLICATION 512-3, TEST 5b)

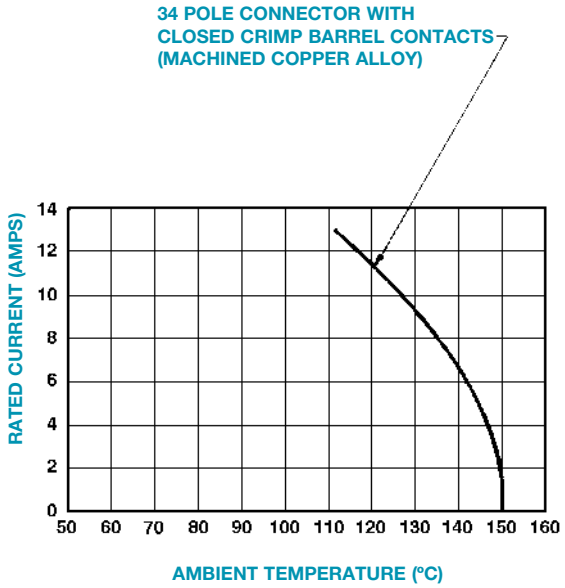

CURVE DEVELOPED USING SIZE 16 CONTACT WITH 16 AWG (1.5 mm^2) SIZE WIRE

TEMPERATURE RISE CURVE

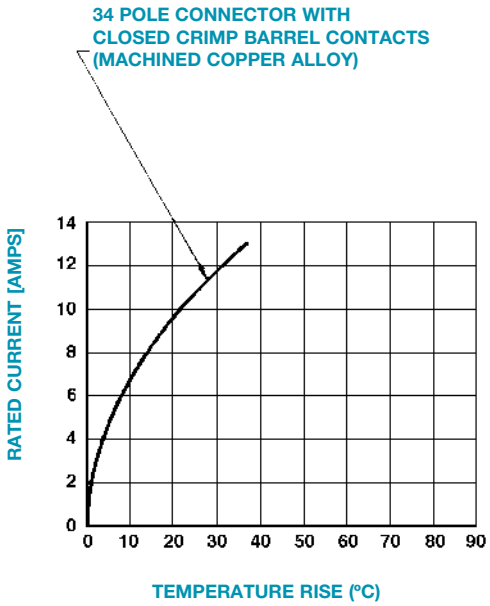

Positronic Industries
connectpositronic.com

HEAVY-DUTY RECTANGULAR CONNECTORS WITH REMOVABLE CONTACTS

Standard
Density
Rectangular

CRIMP CONTACTS

CLOSED CRIMP BARREL WITH INSULATION GRIP (SUPPORT)
PRECISION MACHINED, SOLID COPPER ALLOY

FEMALE CONTACT "CLOSED ENTRY" DESIGN

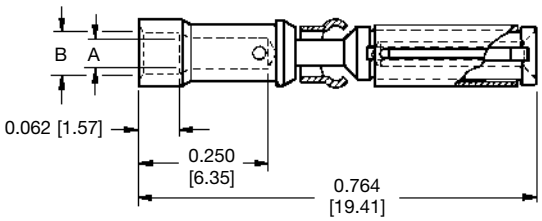

MALE CONTACT

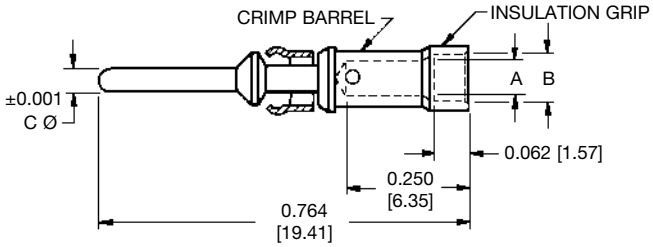

POWER AND SIGNAL CONTACTS

PART NUMBER	WIRE SIZE AWG/[mm²]	A	B	NOMINAL RATING
FC114N2	14 / 16 [2.5/1.5]	0.081 [2.06]	0.105 [2.67]	13 AMP
FC116N2	16 / 18 [1.5/1.0]	0.067 [1.70]	0.093 [2.36]	13 AMP
FC120N2	20 / 22 / 24 [0.5/0.3/0.25]	0.045 [1.14]	0.065 [1.65]	13 AMP
FC124N2	24 / 26 / 28 [0.25/0.12/0.08]	0.027 [0.69]	0.055 [1.40]	13 AMP
FC126N2	26 / 28 / 30 / 32 [0.12-0.03]	0.025 [0.64]	0.046 [1.17]	13 AMP
FC216N2	16 / 18 [1.5/0.8]	0.067 [1.70]	0.093 [2.36]	7.5 AMP
FC220N2	20 / 22 / 24 [0.5/0.3/0.25]	0.045 [1.14]	0.065 [1.65]	7.5 AMP
FC224N2	24 / 26 / 28 [0.25/0.12/0.08]	0.027 [0.69]	0.055 [1.40]	7.5 AMP

PART NUMBER	WIRE SIZE AWG/[mm²]	A	B	C	NOMINAL RATING
MC114N	14 / 16 [2.5/1.5]	0.081 [2.06]	0.105 [2.67]	0.062 [1.57]	13 AMP
MC116N	16 / 18 [1.5/1.0]	0.067 [1.70]	0.093 [2.36]	0.062 [1.57]	13 AMP
MC120N	20 / 22 / 24 [0.5/0.3/0.25]	0.045 [1.14]	0.065 [1.65]	0.062 [1.57]	13 AMP
MC124N	24 / 26 / 28 [0.25/0.12/0.08]	0.027 [0.69]	0.055 [1.40]	0.062 [1.57]	13 AMP
MC126N	26 / 28 / 30 / 32 [0.12-0.03]	0.025 [0.64]	0.046 [1.17]	0.062 [1.57]	13 AMP
MC216N	16 / 18 [1.5/0.8]	0.067 [1.70]	0.093 [2.36]	0.040 [1.02]	7.5 AMP
MC220N	20 / 22 / 24 [0.5/0.3/0.25]	0.045 [1.14]	0.065 [1.65]	0.040 [1.02]	7.5 AMP
MC224N	24 / 26 / 28 [0.25/0.12/0.08]	0.027 [0.69]	0.055 [1.40]	0.040 [1.02]	7.5 AMP

MATERIAL: COPPER ALLOY FINISH: GOLD FLASH OVER NICKEL

CONTACTS ARE NOT SUPPLIED WITH CONNECTOR AND MUST BE ORDERED SEPARATELY

FC120N2

MC120N

For GMCT crimping information, see page 16 and 17.

Additional plating options available by adding suffix to part number
add -14 for 0.000030 [0.76 microns] gold over nickel. Example: FC220N2-14
add -50 for 0.000050 [1.27 microns] gold over copper. Example: MC120N-50

DIMENSIONS ARE IN INCHES [MILLIMETERS].
ALL DIMENSIONS ARE SUBJECT TO CHANGE.

HEAVY-DUTY RECTANGULAR CONNECTORS WITH REMOVABLE CONTACTS

SOLDER CUP CONTACTS

FEMALE CONTACT
"CLOSED ENTRY" DESIGN

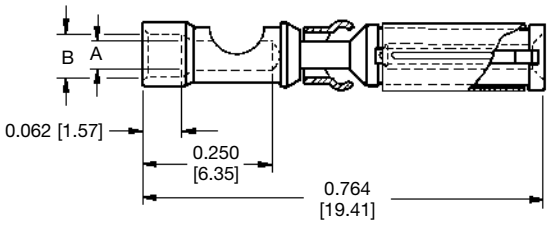

MALE CONTACT

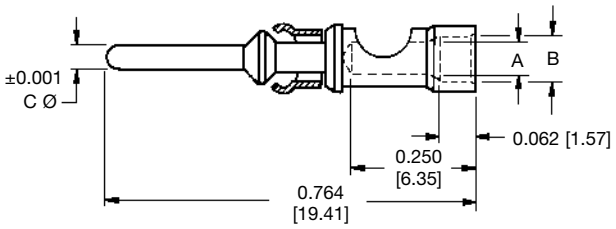

PART NUMBER	WIRE SIZE MAX.	A	B	NOMINAL RATING
FS114N2	14 AWG [2.5 mm²]	0.081 [2.06]	0.105 [2.67]	13 AMP
FS116N2	16 AWG [1.5 mm²]	0.067 [1.70]	0.093 [2.36]	13 AMP
FS120N2	20 AWG [0.5 mm²]	0.045 [1.14]	0.065 [1.65]	13 AMP
FS124N2	24 AWG [0.25 mm²]	0.027 [0.69]	0.055 [1.40]	13 AMP
FS216N2	16 AWG [1.5 mm²]	0.067 [1.70]	0.093 [2.36]	7.5 AMP
FS220N2	20 AWG [0.5 mm²]	0.045 [1.14]	0.065 [1.65]	7.5 AMP
FS224N2	24 AWG [0.25 mm²]	0.027 [0.69]	0.055 [1.40]	7.5 AMP

PART NUMBER	WIRE SIZE MAX.	A	B	C	NOMINAL RATING
MS114N	14 AWG [2.5 mm²]	0.081 [2.06]	0.105 [2.67]	0.062 [1.57]	13 AMP
MS116N	16 AWG [1.5 mm²]	0.067 [1.70]	0.093 [2.36]	0.062 [1.57]	13 AMP
MS120N	20 AWG [0.5 mm²]	0.045 [1.14]	0.065 [1.65]	0.062 [1.57]	13 AMP
MS124N	24 AWG [0.25 mm²]	0.027 [0.69]	0.055 [1.40]	0.062 [1.57]	13 AMP
MS216N	16 AWG [1.5 mm²]	0.067 [1.70]	0.093 [2.36]	0.040 [1.02]	7.5 AMP
MS220N	20 AWG [0.5 mm²]	0.045 [1.14]	0.065 [1.65]	0.040 [1.02]	7.5 AMP
MS224N	24 AWG [0.25 mm²]	0.027 [0.69]	0.055 [1.40]	0.040 [1.02]	7.5 AMP

MATERIAL: COPPER ALLOY
FINISH: GOLD FLASH OVER NICKEL

Additional plating options available by adding suffix to part number
add -14 for 0.000030 [0.76 microns] gold over nickel. Example: FS220N2-14
add -50 for 0.000050 [1.27 microns] gold over copper. Example: MS120N-50

CONTACTS ARE NOT SUPPLIED WITH CONNECTORS AND MUST BE ORDERED SEPARATELY

MILITARY CRIMP CONTACTS

QUALIFIED TO SAE AS 39029/34 AND SAE AS 39029/35

FEMALE CONTACT
"CLOSED ENTRY" DESIGN

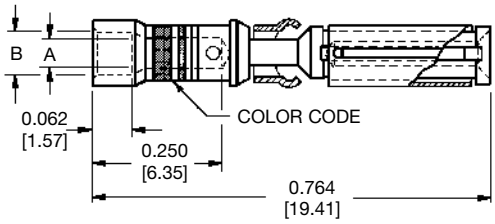

MALE CONTACT

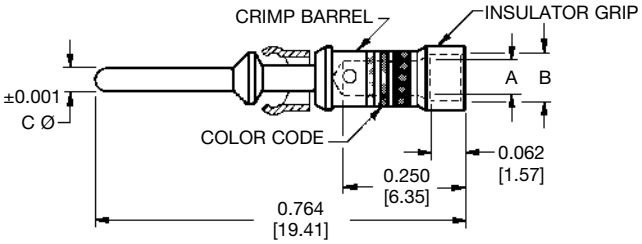

PART NUMBER	A	B	COLOR CODE
M39029/35-274	0.045 [1.14]	0.068 [1.73]	RED/ VIOLET/ YELLOW
M39029/35-275	0.045 [1.14]	0.068 [1.73]	RED/ VIOLET/ GREEN
M39029/35-276	0.067 [1.70]	0.093 [2.36]	RED/ VIOLET/ BLUE

PART NUMBER	A	B	C	COLOR CODE
M39029/34-271	0.045 [1.14]	0.068 [1.73]	0.040 [1.02]	RED/ VIOLET/ BROWN
M39029/34-272	0.045 [1.14]	0.068 [1.73]	0.062 [1.57]	RED/ VIOLET/ RED
M39029/34-273	0.067 [1.70]	0.093 [2.36]	0.062 [1.57]	RED/ VIOLET/ ORANGE

MATERIAL: COPPER ALLOY
FINISH: 0.000050 [1.27 MICRONS] GOLD OVER COPPER

DIMENSIONS ARE IN INCHES [MILLIMETERS].
ALL DIMENSIONS ARE SUBJECT TO CHANGE.

Positronic Industries
connectpositronic.com

HEAVY-DUTY RECTANGULAR CONNECTORS WITH REMOVABLE CONTACTS

Standard
Density
Rectangular

COMPLIANT TERMINATION PRESS-FIT CONTACTS

PRECISION MACHINED, COPPER ALLOY

MATERIAL: COPPER ALLOY

FINISH: GOLD FLASH OVER NICKEL

CONTACTS ARE NOT SUPPLIED WITH CONNECTORS AND MUST BE ORDERED SEPARATELY.

SEE PAGE 7 FOR PRINTED BOARD CONTACT HOLE POSITIONS.

FEMALE CONTACT "CLOSED ENTRY" DESIGN

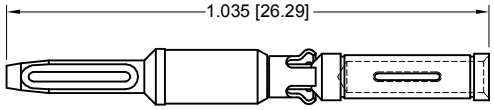

Part Number: FPF218N2

MALE CONTACT

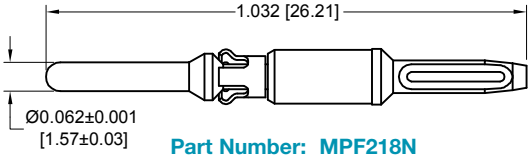

Part Number: MPF218N

FEMALE CONNECTOR

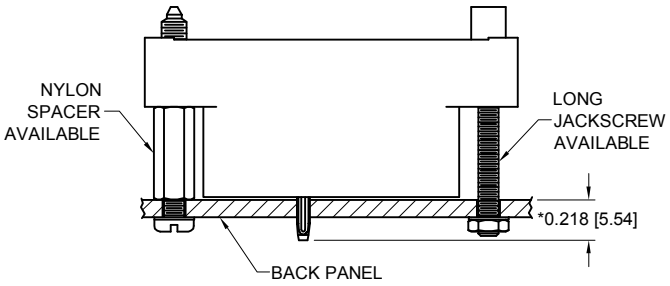

MALE CONNECTOR

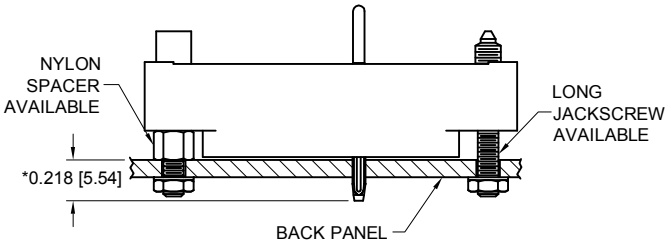

Additional plating options available by adding suffix to part number
add -14 for 0.000030 [0.76 microns] gold over nickel.
Example: FPF218N2-14
add -50 for 0.000050 [1.27 microns] gold over copper.
Example: MPF218N-50

CONSULT TECHNICAL SALES FOR PRESS-FIT INSTALLATION TOOL.
CONSULT TECHNICAL SALES FOR PART NUMBERS FOR THE LONG JACKSCREW OR NYLON SPACER.
***ADDITIONAL CONTACT EXTENSION LENGTHS AVAILABLE.**
CONSULT TECHNICAL SALES FOR AVAILABILITY OF SOLID PRESS-FIT CONTACTS.

SUGGESTED PRINTED BOARD HOLE SIZES FOR COMPLIANT PRESS-FIT CONNECTORS

Traditionally, tin-lead has been a popular plating for PBC holes. However, many PCB hole platings must now be RoHS Compliant. Positronic is pleased to offer **PCB HOLE SIZE FOR RoHS** PCB plating as shown below.

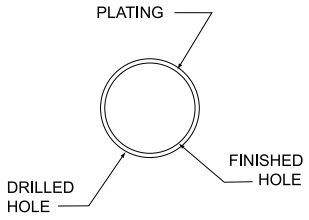

PRESS-FIT CONTACT HOLE

Note: For PCB plating compositions not shown, consult Technical Sales.

BI-SPRING COMPLIANT PRESS-FIT CONTACT HOLE				
BOARD TYPE	**CONTACT SIZE / TYPE**	**RECOMMENDED DRILL HOLE SIZE**	**RECOMMENDED PLATING**	**FINISHED HOLE SIZES**
TIN-LEAD SOLDER PCB	**16 BI-SPRING**	ø0.069±0.001 [ø1.750±0.025]	0.0006 [15µ] minimum solder over 0.0010 [25µ] min. copper	ø0.0630+0.0035-0.0024 [ø1.600+0.090-0.060]
RoHS PCB PLATING OPTIONS				
COPPER PCB	**16 BI-SPRING**	ø0.069±0.001 [ø1.750±0.025]	0.0010 [25µ] min. copper	ø0.0630+0.0035-0.0024 [ø1.600+0.090-0.060]
IMMERSION TIN PCB	**16 BI-SPRING**	ø0.069±0.001 [ø1.750±0.025]	0.000033±0.000006 [0.85±0.15µ] immersion tin over 0.0010 [25µ] min. copper	ø0.0630+0.0035-0.0024 [ø1.600+0.090-0.060]
IMMERSION SILVER PCB	**16 BI-SPRING**	ø0.069±0.001 [ø1.750±0.025]	0.000013±0.000007 [0.34±0.17µ] immersion silver over 0.0010 [25µ] min. copper	ø0.0630+0.0035-0.0024 [ø1.600+0.090-0.060]
ELECTROLESS NICKEL / IMMERSION GOLD PCB	**16 BI-SPRING**	ø0.069±0.001 [ø1.750±0.025]	0.000002 [0.05µ] min. immersion gold over 0.000177±0.000059 [4.5±1.5µ] electroless nickel per IPC-4552 over 0.0010 [25µ] min. copper	ø0.0630+0.0035-0.0024 [ø1.600+0.090-0.060]

DIMENSIONS ARE IN INCHES [MILLIMETERS].
ALL DIMENSIONS ARE SUBJECT TO CHANGE.

HEAVY-DUTY RECTANGULAR CONNECTORS WITH REMOVABLE CONTACTS

STRAIGHT SOLDER CONTACTS

PRECISION MACHINED, SOLID COPPER ALLOY

FEMALE CONTACT "CLOSED ENTRY" DESIGN

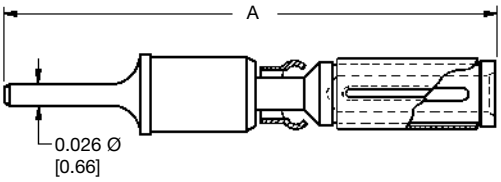

MATERIAL: COPPER ALLOY

FINISH: GOLD FLASH OVER NICKEL

MALE CONTACT

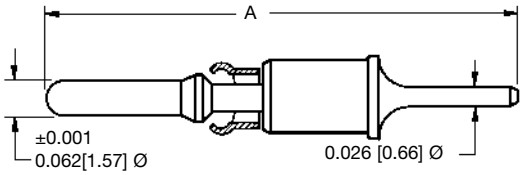

PART NUMBER	A	B
FDS125N2	0.950 [24.13]	0.125 [3.18]
FDS156N2	0.981 [24.92]	0.156 [3.96]
FDS187N2	1.012 [25.70]	0.187 [4.75]

CONSULT TECHNICAL SALES FOR CONTACTS OF DIFFERENT LENGTHS AND TAIL DIAMETERS

UNLESS SPECIFIED OTHERWISE, STRAIGHT SOLDER CONTACTS ARE NOT SUPPLIED WITH CONNECTORS AND MUST BE ORDERED SEPARATELY

CONTACTS MAY BE INSTALLED IN CONNECTOR TO CUSTOMER ORDER

PART NUMBER	A	B
MDS125N	0.950 [24.13]	0.125 [3.18]
MDS156N	0.981 [24.92]	0.156 [3.96]
MDS187N	1.012 [25.70]	0.187 [4.75]

FEMALE CONNECTOR

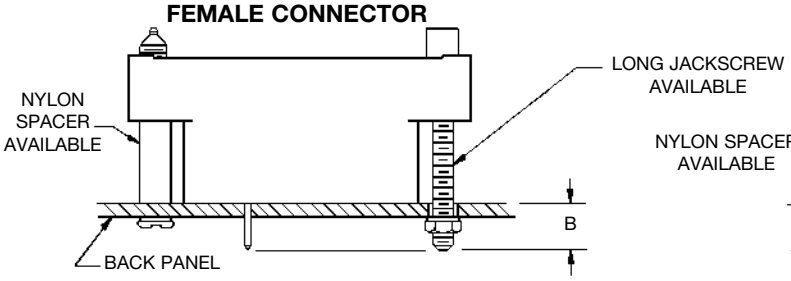

MALE CONNECTOR

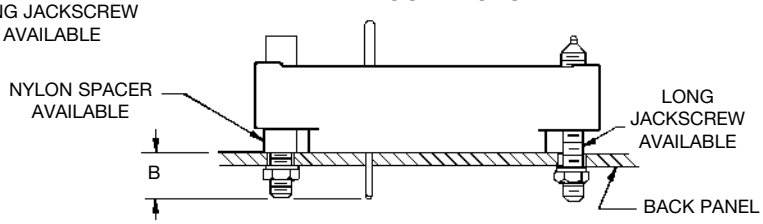

Additional plating options available by adding suffix to part number
add -14 for 0.000030 [0.76 microns] gold over nickel. Example: FDS156N2-14
add -50 for 0.000050 [1.27 microns] gold over copper. Example: MDS187N-50

CONSULT TECHNICAL SALES FOR PART NUMBERS FOR THE LONG JACKSCREW OR NYLON SPACER

DIMENSIONS ARE IN INCHES [MILLIMETERS].
ALL DIMENSIONS ARE SUBJECT TO CHANGE.

Positronic Industries
connectpositronic.com

HEAVY-DUTY RECTANGULAR CONNECTORS WITH REMOVABLE CONTACTS

Standard
Density
Rectangular

CRIMP SHIELDED CONTACTS

MALE CONTACT

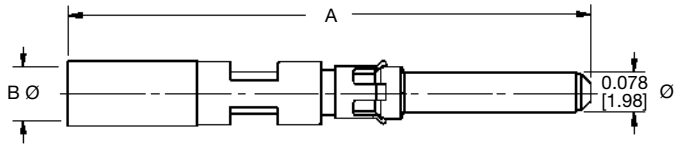

FEMALE CONTACT

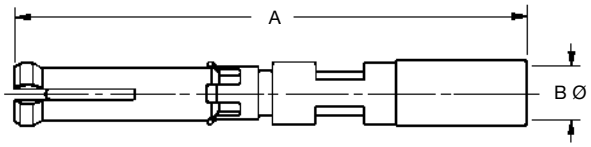

FCS126N2

MCS126N

CONTACT DESIGNATION	PART NUMBER	A	B Ø	CABLE SIZE
MALE	MCS126N	0.993 [25.22]	0.045 [1.14]	RG 178 B/U RG 196 A/U
FEMALE	FCS126N2	0.967 [24.56]	0.045 [1.14]	RG 178 B/U RG 196 A/U
MALE	MCS226N	1.048 [26.62]	0.070 [1.78]	RG 179 B/U RG 316 /U
FEMALE	FCS226N2	1.022 [25.96]	0.070 [1.78]	RG 179 B/U RG 316 /U

TECHNICAL CHARACTERISTICS

MATERIALS AND FINISHES:

Insulating Material: (Dielectric) PCTFE.

Inner Contacts: Phosphor bronze, 0.000030 inch [0.75 microns] gold over nickel.

Outer Contacts: Brass and beryllium copper, gold flash over nickel. Other finishes available upon request.

MECHANICAL CHARACTERISTICS:*

Contact Retention In Insulator: 20 lbs. [89N].

Removable Contacts: Rear insertion, front removable.

Insertion Force Per Contact: 8 oz. [2.2N] per contact maximum.

Durability: 100 cycles minimum.

Vibration: 20g from 10 HZ to 500 HZ.

Shock: 30g - 11 ms.

ELECTRICAL CHARACTERISTICS:

MICRO-COAXIAL CONTACTS	Contact/Wire Combinations			
	126N		226N	
	RG178	RG196	RG179	RG316
Characteristic Impedance (ohms)	50	50	75	50
Frequency Range	0-500 MHz			
VSWR				
0 to 200 MHz	1.25			
200 to 500 MHz	1.70		2.25	
Insertion Loss @ 500 MHz	0.2 dB		1.0 dB	

Dielectric Strength At Sea Level: 600 V rms.

Initial Contact Resistance: 0.012 ohms maximum.

Insulator Resistance: 5 G ohms.

CLIMATIC CHARACTERISTICS:

Temperature Range: -55°C to +125°C.

9506-0 CRIMP TOOL

SHIELDED CABLE STRIP LENGTH

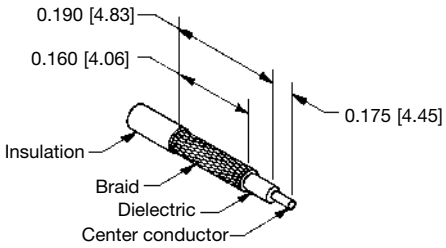

DIMENSIONS ARE IN INCHES [MILLIMETERS].
ALL DIMENSIONS ARE SUBJECT TO CHANGE.

CRIMPING INFORMATION FOR GMCT SERIES CRIMP CONTACTS

USE INDICATED POSITRONIC TOOLS FOR BEST RESULTS

Step 1: Strip wire to indicated length.

Take Care Not To:
- **Damage or remove strands.**
- **Untwist or overtwist strands.**
- **Leave insulation particles on strands.**
- **Damage insulation.**

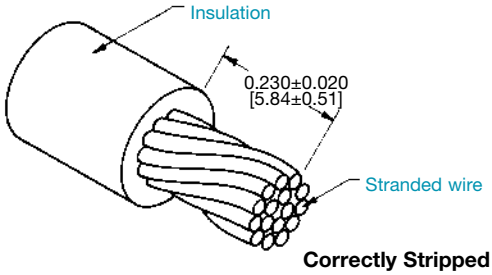

Correctly Stripped Wire

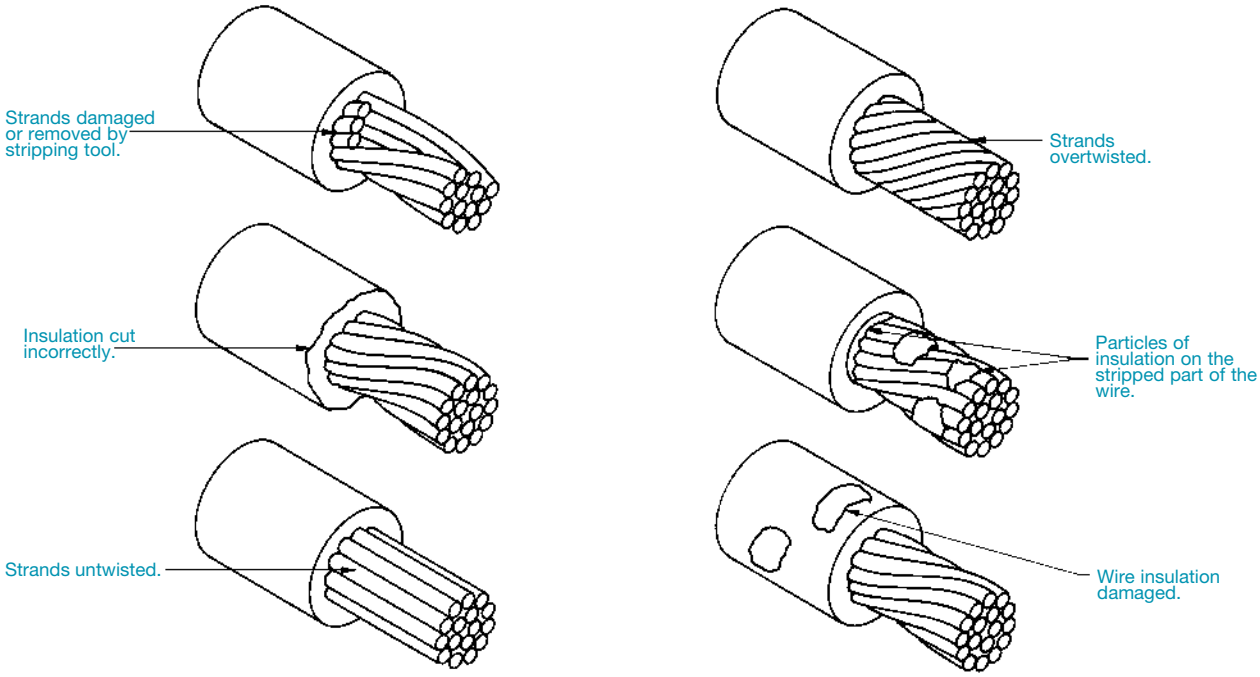

Examples of Stripping Faults

Step 2: Crimp wire to contact.

For Hand Crimp Tool:
- **Place contact into crimping tool.**
- **Insert wire into contact.**
- **Center contact by slowly closing the crimping tool until the crimp indenters make contact with the crimp barrel.**
- **Complete the cycle of the crimping tool in one smooth motion.**
- **Remove the crimped contact.**

Positronic Industries
connectpositronic.com

HEAVY-DUTY RECTANGULAR CONNECTORS WITH REMOVABLE CONTACTS

Standard
Density
Rectangular

CRIMPING INFORMATION FOR GMCT SERIES CRIMP CONTACTS

Step 3: Inspect the crimp.

For All Tools:
- **Strands to be visible through the inspection hole.**
- **Strands not to be visible beyond the insulation support.**
- **Crimped contact to meet recommended conductor tensile force shown in chart.**
- **Check for peeled gold and bent contacts.**

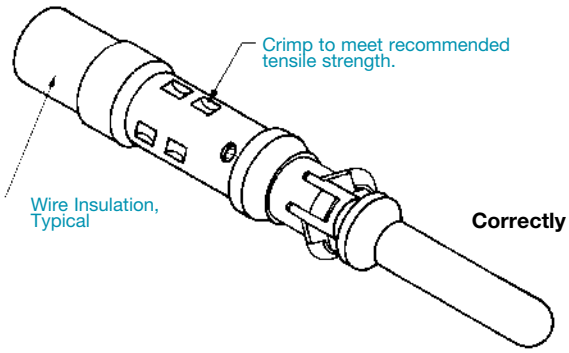

Correctly Crimped Contact

Cross Section of Correctly Crimped Contact

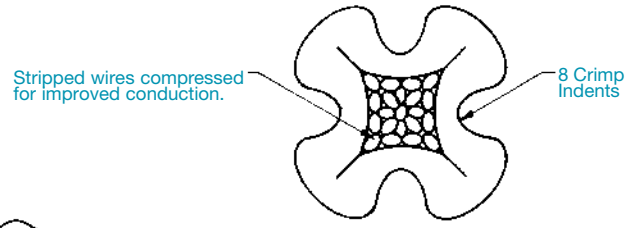

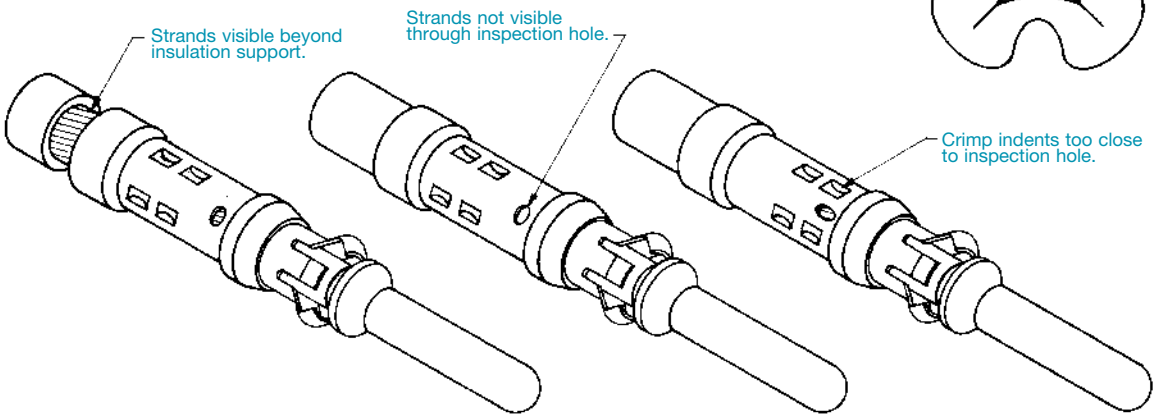

Stripped part of the wire too long. **Stripped part of the wire too short.** **Crimp indents incorrectly located.**

Examples of Crimping Faults

Positronic Recommended Conductor Tensile Strength	
WIRE SIZE AWG/[mm²]	**AXIAL LOAD POUNDS/[N]**
14 [2.5]	70 [311]
16 [1.5]	50 [222]
18 [1.0]	28 [125]
20 [0.5]	20 [89]
22 [0.3]	12 [53]
24 [0.25]	8 [36]
26 [0.12]	5 [22]
28 [0.08]	3 [13]

POSITRONIC RECOMMENDED TOOLS		
TOOL TYPE	**CONTACT SIZE AWG [mm²]**	**TOOL NUMBERS**
HAND CRIMP TOOL:	14-24 [2.5-0.25]	9501-0-0-0 WITH 9502-1-0-0 POSITIONER
	26-28 [0.12-0.08]	9507-0-0-0 WITH 9502-18-0-0 POSITIONER
INSERTION TOOL:	N/A	9099-0-0-0
EXTRACTION TOOL:	N/A	9081-0-0-0

Conductor tensile strength values are derived using silver-tin plated copper wires. Values may change depending upon what type of wire is used.

**DIMENSIONS ARE IN INCHES [MILLIMETERS].
ALL DIMENSIONS ARE SUBJECT TO CHANGE.**

CYCLE-CONTROLLED STEP ADJUSTABLE HAND CRIMP TOOL

****M22520/1-01**
****Part No. 9501-0-0-0**

Features of this positive ratchet action tool include accommodations for wire sizes 14 AWG [2.5 mm^2] through 28 AWG [0.08 mm^2] and eight (8) impression crimp on wires and contacts of various compositions. Required for use with this basic tool is the turret head part number 9502-1-0-0.

HEAVY-DUTY RECTANGULAR CONNECTORS WITH REMOVABLE CONTACTS

CONTACT INSERTION TOOL

Part No. 9099-0-0-0

An easy-to-use contact insertion tool for 14 AWG [2.5 mm^2] and smaller wires. See photographic demonstration shown below for recommended insertion procedure.

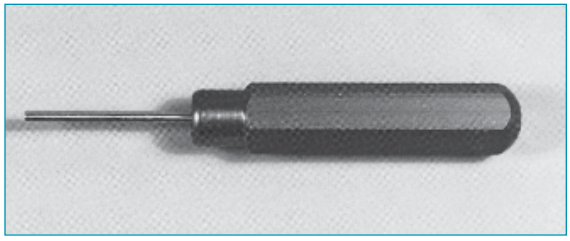

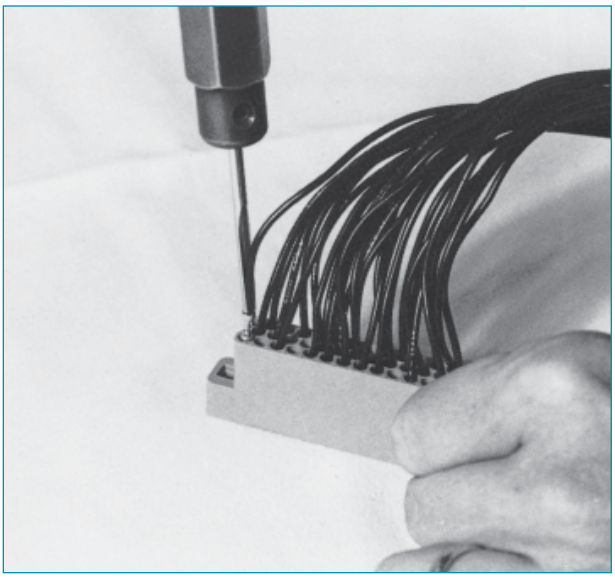

CONTACT EXTRACTION TOOL

Part No. 9081-0-0-0

The spring loaded contact extraction tool simplifies the extraction of removable contacts from the connector insulators. Simply insert the hollow tool tip over the male or female contact from the front face of the insulator, rotate the tool slightly while increasing the pushing force against the butt of the extraction tool. The contact will be released from the insulator retention system and “pop out” of the rear face of the insulator. See photo below for recommended removal procedure.

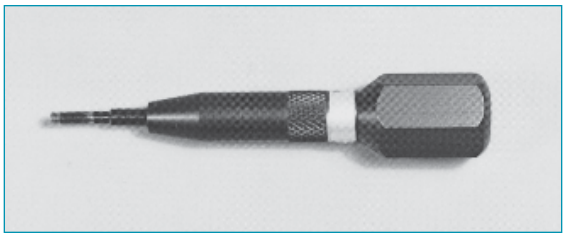

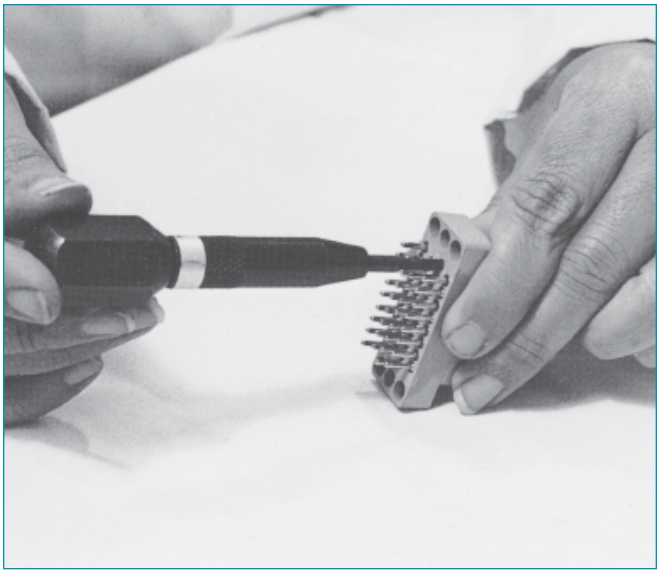

DIMENSIONS ARE IN INCHES [MILLIMETERS].
ALL DIMENSIONS ARE SUBJECT TO CHANGE.

REMOVABLE CONTACT ORDERING ASSISTANCE CHART

GMCT SERIES CRIMP AND SOLDER CUP CONTACT TERMINATIONS

TERMINATION TYPE	CONTACT FUNCTION	CONTACT SIZE	WIRE SIZE	MALE PART NUMBER	FEMALE PART NUMBER
CRIMP	POWER	16	14 AWG [2.5 mm²] - 16 AWG [1.5 mm²]	MC114N	FC114N2
			16 AWG [1.5 mm²] - 18 AWG [1.0 mm²]	MC116N	FC116N2
		20	16 AWG [1.5 mm²] - 18 AWG [1.0 mm²]	MC216N	FC216N2
	SIGNAL	16	20 AWG [0.5 mm²] - 24 AWG [0.25 mm²]	MC120N	FC120N2
			24 AWG [0.25 mm²] - 28 AWG [0.08 mm²]	MC124N	FC124N2
			26 AWG [0.12 mm²] - 28 AWG [0.08 mm²]	MC126N	FC126N2
		20	20 AWG [0.5 mm²] - 24 AWG [0.25 mm²]	MC220N	FC220N2
			24 AWG [0.25 mm²] - 28 AWG [0.08 mm²]	MC224N	FC224N2
	MILITARY	16	16 AWG [1.5 mm²] - 20 AWG [0.5 mm²]	M39029/34-273	M39029/35-276
			20 AWG [0.5 mm²] - 24 AWG [0.25 mm²]	M39029/34-272	M39029/35-275
		20	20 AWG [0.5 mm²] - 24 AWG [0.25 mm²]	M39029/34-271	M39029/35-274
	COAX	--	RG 178 B/U, RG 196 A/U	MCS126N	FCS126N2
			RG 179 A/U, RG 316 /U	MCS226N	FCS226N2
SOLDER CUP	POWER	16	14 AWG [2.5 mm²] max.	MS114N	FS114N2
			16 AWG [1.5 mm²] max.	MS116N	FS116N2
		20	16 AWG [1.5 mm²] max.	MS216N	FS216N2
	SIGNAL	16	20 AWG [0.5 mm²] max.	MS120N	FS120N2
			24 AWG [0.25 mm²] max.	MS124N	FS124N2
		20	20 AWG [0.5 mm²] max.	MS220N	FS220N2
			24 AWG [0.25 mm²] max.	MS224N	FS224N2

GMCT SERIES PRINTED BOARD MOUNT CONTACT TERMINATIONS

TERMINATION TYPE	CONTACT SIZE	USABLE TERMINATION LENGTH	TERMINATION DIMENSION	MALE PART NUMBER	FEMALE PART NUMBER
STRAIGHT	16	0.125 [3.18]	0.026 Ø [0.66]	MDS125N	FDS125N2
		0.156 [3.96]	0.026 Ø [0.66]	MDS156N	FDS156N2
		0.187 [4.75]	0.026 Ø [0.66]	MDS187N	FDS187N2
COMPLIANT PRESS FIT	16	0.218 [5.54]		MPF218N	FPF218N2

Positronic Industries
connectpositronic.com

HEAVY-DUTY RECTANGULAR CONNECTORS WITH REMOVABLE CONTACTS

Standard
Density
Rectangular

ORDERING INFORMATION - CODE NUMBERING SYSTEM

Specify Complete Connector By Selecting An Option From Step 1 Through 9

STEP	1	2	3	4	5	6	7	8	9	10		11
EXAMPLE	GMCT	34	F	0	0	R	A	Z	0	/AA	—	

STEP 1 - BASIC SERIES

GMCT Series

STEP 2 - CONNECTOR VARIANTS

9, 14, 18, 20, 26, 34, 41, 42, 50, 60, 66, 75, 104

STEP 3 - CONNECTOR GENDER

M - Male Insulator
F - Female Insulator

STEP 4 - CONTACT TERMINATION TYPE

All Female contacts "closed entry" design.
0 - Contacts to be ordered separately, see Contact ordering charts.

*STEP 5 - POLARIZING GUIDES AND JACKSCREW SYSTEM

G - Polarizing grounding guides.
N - Polarizing guides.
NSS - Stainless steel polarizing guides.
T - Fixed jackscrews.
E - Short turnable jackscrews, offered with set screw option.
EL - Long turnable jackscrews, offered with set screw option.
E1 - Turnable jackscrews used on 9, 14, 18, 20, 26 and 41 variant hoods, offered with set screw option.
0 - If no polarizing guides or jackscrews are required. Also, use "0" if ordering hoods equipped with jackscrews, for variants 34, 42, 50, 60, 66, 75 and 104, see STEP 8.

*STEP 6 - SHELLS AND MOUNTING PLATES

P - Male shell, not available on 41 variant.
R - Female shell, not available on 41 variant.
H - Mounting plate, not available on 41 variant.
W - Male shell with mounting plate.
U - Female shell with mounting plate.
0 - If no shells or mounting plates are required.

*STEP 7 - POLARIZATION POSITIONS OF SHELLS

Select letter to designate position of male pin and female slot for polarization system.

A, B, C, D, E, F, G
0 – If no polarization is required or if no shells are required.

STEP 11 - SPECIAL OPTIONS

CONTACT TECHNICAL SALES FOR SPECIAL OPTIONS

STEP 10 - ENVIRONMENTAL COMPLIANCE OPTIONS

/AA - Compliant per EU Directive 2002/95/EC (RoHS)

NOTE: If compliance to environmental legislation is not required, this step will not be used. Example: GMCT34F00RAZ0

*STEP 9 - ADDITIONAL FEATURES

B - For black anodized aluminum parts.
C - Set screw option, offered on the E, EL and E1.
R - For chemical conversion coating on aluminum parts.
V - Lock tab, offered on 9, 14, 18, 20, 26, 34, 41 and 42 variants.
VL - Lock lever, offered on 9, 14, 18, 20, 26, 34, 41 and 42 variants.
FB - Floating bushings for mounting plate.
0 - If no additional options are required.

*STEP 8 - CABLE ADAPTERS (HOODS)

J - Top opening hood (formed), not offered on 60, 66 and 104 variants.
L - Side opening hood (formed), not offered on 60, 66 and 104 variants.
Q - Top opening hood (drawn), offered on 60, 66 and 104 variants.
S - Side opening hood (drawn), offered on 60, 66 and 104 variants.
Y - Top opening hood (formed), equipped with stainless steel jackscrew system, offered on 34, 42, 50 and 75 variants.
I - Side opening hood (formed), equipped with stainless steel jackscrew system, offered on 34, 42, 50 and 75 variants.
Z - Top opening hood (drawn), equipped with stainless steel jackscrew system, offered on 34, 50, 60, 66, 75 and 104 variants.
V - Side opening hood (drawn), equipped with stainless steel jackscrew system, offered on 34, 50, 60, 66, 75 and 104 variants.
0 - If no hoods are required.

***Note:** For details of items listed in steps 5 through 9, see heavy-duty rectangular connector accessories section on pages 44-59.

DIMENSIONS ARE IN INCHES [MILLIMETERS].
ALL DIMENSIONS ARE SUBJECT TO CHANGE.

HEAVY-DUTY RECTANGULAR PRINTED BOARD CONNECTORS WITH STRAIGHT SOLDER CONTACTS

Size 16 Contacts
Conforms to
MIL-DTL-28748
IEC Publication 807-1

U.L. Recognized,
File #E49351

Telecommunication
U.L. File #E140980

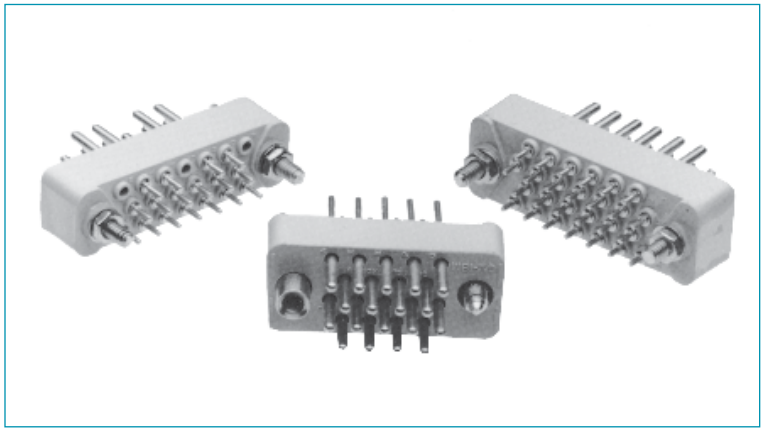

GAP Series connectors are heavy-duty, multi-pole, low profile, high reliability connectors. Contacts are male only with 0.062 inch [1.57mm] diameters, rated to 7.5 amperes per contact. Termination style is straight solder printed board mount. GAP Series connectors are intermateable with Positronic GMCT Series connectors.

A wide array of mounting, locking and polarizing accessories is available for this series. For details, see the Heavy-Duty Rectangular Connector Accessories section.

Due to its printed board mount termination style, and its 0.062 inch [1.57mm] diameter contacts, the GAP Series is ideal for heavy-duty applications found in avionics, medical equipment, telecommunications, instrumentation and process control applications.

GAP SERIES TECHNICAL CHARACTERISTICS

MILITARY SPECIFICATIONS:

Conforms to MIL-DTL-28748.

INTERNATIONAL STANDARDS:

IEC 807-1.
U.L. Recognized.

MATERIALS AND FINISHES:

Insulator:	Glass filled DAP per ASTM-D-5948 type SDG-F. Grey color is standard, black available.
Fixed Contacts:	Copper alloy with gold flash over nickel. Other finishes available upon request.
Jackscrew System:	Passivated stainless steel.
Polarizing Guides:	Copper alloy with nickel plate or passivated stainless steel.
Vibration Locks:	Copper alloy with zinc plate and chromate seal.

POSITRONIC INDUSTRIES RoHS Compliant per EU Directive 2002/95/EC

For RoHS options see page 25.

MECHANICAL CHARACTERISTICS:

Fixed Contacts:	**Male** – Size 16: 0.062 inch [1.57 mm] diameter.
Contact Retention in Insulator:	10 lbs. [44.5N] minimum.
Contact Termination:	Straight printed board mounted.
Locking Systems:	Friction, vibration locks and jackscrews.
Polarization:	Guide pins and guide sockets, and jackscrew system.
Mechanical Operations:	1000 operations per IEC 512-5.
Jackscrews:	Standard threads, 6-32 UNC. Metric threads, M3X0.5 available.

ELECTRICAL CHARACTERISTICS:

Contact Current Rating (maximum):	7.5 amperes limited at contact termination diameter.
Initial Contact Resistance:	0.003 ohms.
Flash over Voltage:	2500 V.AC [rms].
Test Voltage:	1200 V.AC [rms].
Insulation Resistance (minimum):	5 G ohms.
Clearance and Creepage Distance (minimum):	0.047 inch [1.19 mm].
Working Temperature:	-55°C to 125°C.
Working Voltage:	250 V.AC [rms].

STRAIGHT SOLDER CONTACTS

MALE ONLY

CONTACT MATERIAL: COPPER ALLOY
CONTACT FINISH: GOLD FLASH OVER NICKEL

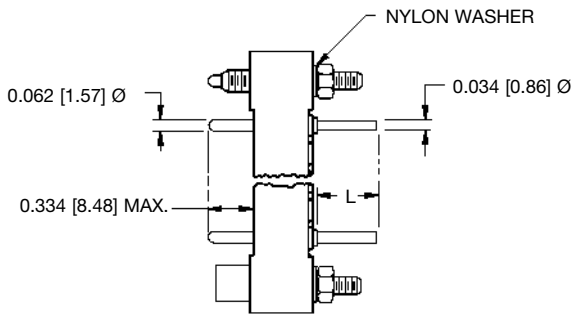

CONTACT CODE	L
DS3	0.093 [2.36]
DS4	0.125 [3.18]
DS5	0.156 [3.96]
DS6	0.187 [4.75]

Typical Part Number: GAP34MDS6T0000

SEE GMCT SERIES PRINTED BOARD HOLE PATTERN PAGE FOR CONNECTOR VARIANT CONTACT HOLE POSITIONS

SPECIFY CONTACT CODE IN STEP 4 OF ORDERING INFORMATION FOR DESIRED LENGTH OF CONTACT TERMINATION

GAP SERIES, LOW PROFILE, PRINTED BOARD MOUNT CONNECTOR

GMCT SERIES, HIGH PROFILE, PRINTED BOARD MOUNT CONNECTOR

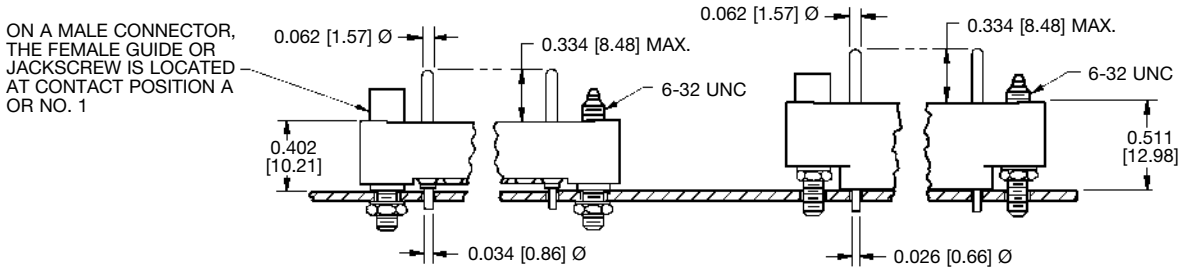

GAP34MDS4T0000

GMCT34M0T0000 WITH MDS125N CONTACTS INSTALLED

**DIMENSIONS ARE IN INCHES [MILLIMETERS].
ALL DIMENSIONS ARE SUBJECT TO CHANGE.**

HEAVY-DUTY RECTANGULAR PRINTED BOARD CONNECTORS WITH STRAIGHT SOLDER CONTACTS

CONTACT HOLE POSITION DIMENSIONS AND PRINTED BOARD HOLE PATTERN

MATING FACE OF MALE CONNECTOR

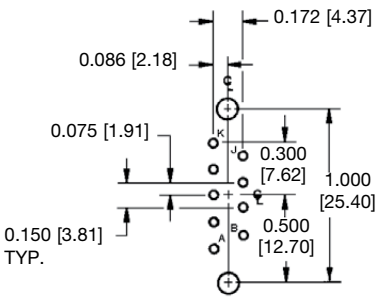

SIZE 9

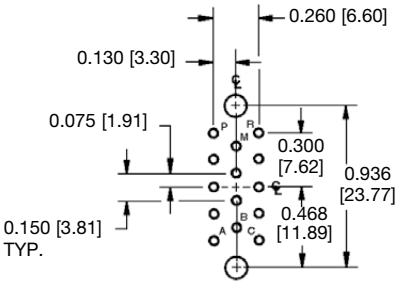

SIZE 14

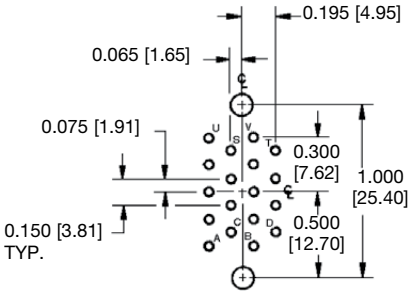

SIZE 18

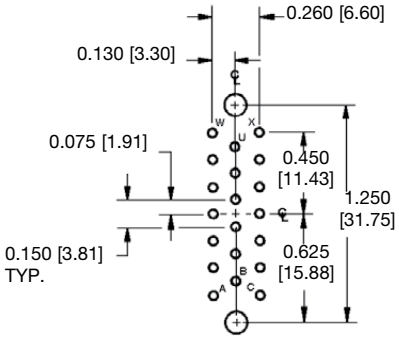

SIZE 20

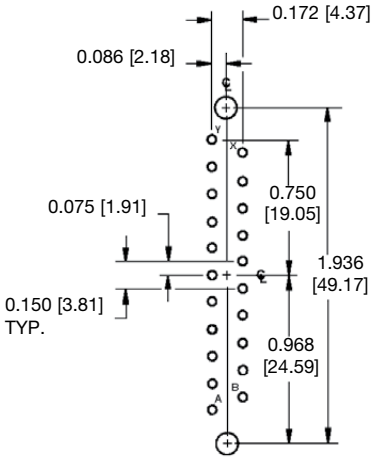

SIZE 21

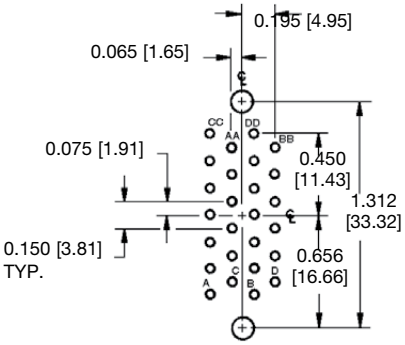

SIZE 26

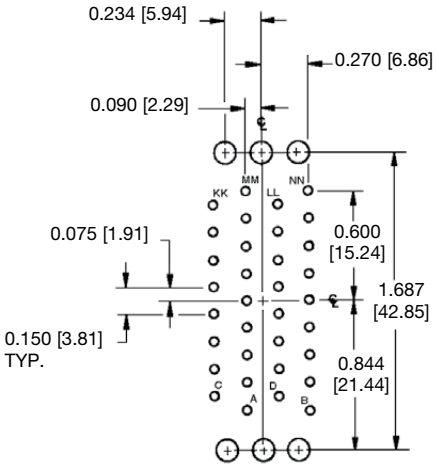

SIZE 34

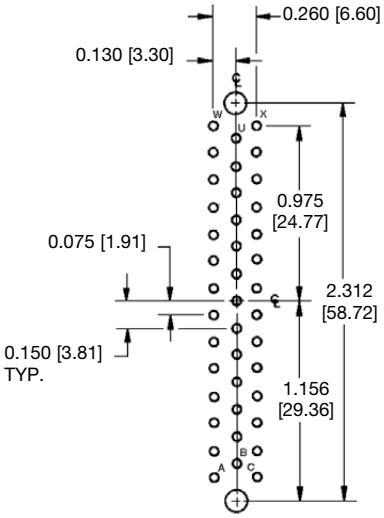

SIZE 41

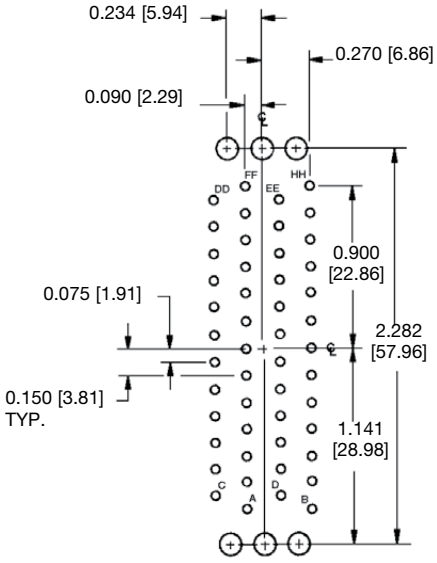

SIZE 50

HOLE IDENTIFICATION FOR REFERENCE ONLY

SUGGEST 0.120 [3.05] Ø HOLES IN PRINTED BOARD FOR CONNECTOR MOUNTING HOLES

SUGGEST 0.052 [1.32] Ø HOLES IN PRINTED BOARD FOR GAP SERIES CONNECTOR CONTACT TERMINATIONS

DIMENSIONS ARE IN INCHES [MILLIMETERS]. ALL DIMENSIONS ARE SUBJECT TO CHANGE.

ORDERING INFORMATION - CODE NUMBERING SYSTEM

Specify Complete Connector By Selecting An Option From Step 1 Through 9

STEP	1	2	3	4	5	6	7	8	9	10		11
EXAMPLE	GAP	26	M	DS4	T	0	0	0	0	/AA	—	-14

STEP 1 - BASIC SERIES

GAP Series
(Male Connector Only).

STEP 2 - CONNECTOR VARIANTS

9, 14, 18, 20, 21, 26, 34, 41, 50

STEP 3 - CONNECTOR GENDER

M - Male insulator only

STEP 4 - CONTACT TERMINATION TYPE

DS3 - Straight solder 0.093 [2.36]
DS4 - Straight solder 0.125 [3.18]
DS5 - Straight solder 0.156 [3.96]
DS6 - Straight solder 0.187 [4.75]

*STEP 5 - POLARIZING GUIDES AND JACKSCREW SYSTEM

G - Polarizing grounding guides.
N - Polarizing guides.
NSS - Stainless steel polarizing guides.
T - Fixed jackscrews.
0 - If no polarizing guides or jackscrews are required.

*STEP 6 - SHELLS

P - Male shell, not available on 41 variant.
R - Female shell, not available on 41 variant.
0 - If no shells or mounting plates are required.

*STEP 7 - POLARIZATION POSITIONS OF SHELLS

Select letter to designate position of male pin or female slot for polarization system.

A, B, C, D, E, F, G
0 – If no polarization is required or if no shells are required.

*STEP 8 - CABLE ADAPTERS (HOODS)

0 - Not offered for GAP series.

*STEP 9 - ADDITIONAL FEATURES

B - For black anodized aluminum parts.
R - For chemical conversion coating on aluminum parts.
V - Lock tab, offered on 9, 14, 18, 20, 21, 26, 34 and 41 variants.
0 - If no additional options are required.

STEP 10 - ENVIRONMENTAL COMPLIANCE OPTIONS

/AA - Compliant per EU Directive 2002/95/EC (RoHS)

NOTE: If compliance to environmental legislation is not required, this step will not be used. Example: GAP26MDS4T0000

STEP 11 - SPECIAL OPTIONS

-14 – Contacts plated 0.000030 [0.76µ] gold over nickel.

-50 – Contacts plated 0.000050 [1.27µ] gold over copper.

CONTACT TECHNICAL SALES FOR SPECIAL OPTIONS

***NOTE:** For details of items listed in steps 5 through 9, see heavy-duty rectangular connector accessories section on pages 44-59.

DIMENSIONS ARE IN INCHES [MILLIMETERS].
ALL DIMENSIONS ARE SUBJECT TO CHANGE.

HEAVY-DUTY RECTANGULAR RIGHT ANGLE PRINTED BOARD CONNECTORS

Size 16 Contacts
Conforms to
MIL-DTL-28748
IEC Publication 807-1

U.L. Recognized,
File #E49351

Telecommunication
U.L. File #E140980

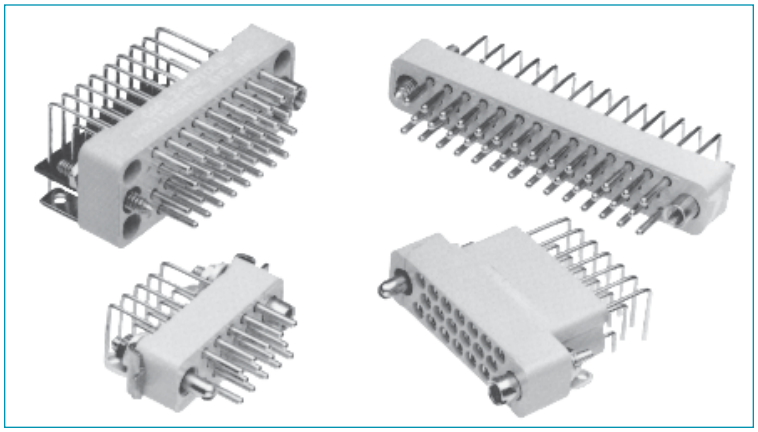

GAPL Series connectors are heavy-duty, multi-pole, high reliability connectors conforming to MIL-DTL-28748 specifications. Termination style is right angle printed board mount. GAPL Series connectors are intermateable with Positronic GMCT Series connectors.

GAPL Series connectors are offered with a variety of mounting, locking and polarizing accessories. For details, see the Heavy-Duty Rectangular Connector Accessories section.

GAPL Series connectors are ideal for high reliability, heavy-duty applications which require a printed board mounted connector. They are widely utilized in navigational systems, robotics, mainframe and peripheral computers, medical equipment, telecommunications, instrumentation and process control applications.

GAPL SERIES TECHNICAL CHARACTERISTICS

MILITARY SPECIFICATIONS:

Conforms to MIL-DTL-28748.

INTERNATIONAL STANDARDS:

IEC 807-1.
U.L. Recognized.

MATERIALS AND FINISHES:

Insulator:	Glass filled DAP per ASTM-D-5948 type SDG-F. Grey color is standard, black available.
Fixed Contacts:	Copper alloy with gold over nickel. Other finishes avaiable upon request.
Jackscrew System:	Passivated stainless steel.
Polarizing Guides:	Copper alloy with nickel plate or passivated stainless steel.
Vibration Locks:	Copper alloy with zinc plate and chromate seal.

POSITRONIC INDUSTRIES RoHS Compliant per EU Directive 2002/95/EC

For RoHS options see page 31.

MECHANICAL CHARACTERISTICS:

Fixed Contacts:	**Male** – Size 16: 0.062 inch [1.57 mm] diameter. **Female** – "Closed entry" design for highest reliability.
Contact Retention in Insulator:	10 lbs. [44.5N] minimum.
Contact Termination:	Right angle printed board mounted.
Locking Systems:	Friction, vibration locks and jackscrews.
Polarization:	Guide pins and guide sockets, and jackscrew system.
Mechanical Operations:	1000 operations per IEC 512-5.
Jackscrews:	Standard threads, 6-32 UNC. Metric threads, M3X0.5 available.

ELECTRICAL CHARACTERISTICS:

Contact Current Rating (maximum):	7.5 amperes limited at contact termination diameter.
Initial Contact Resistance:	0.003 ohms.
Flash over Voltage:	2500 V.AC [rms].
Test Voltage:	1200 V.AC [rms].
Insulation Resistance (minimum):	5 G ohms.
Clearance and Creepage Distance (minimum):	0.047 inch [1.19 mm].
Working Temperature:	-55°C to 125°C.
Working Voltage:	250 V.AC [rms].

RIGHT ANGLE PRINTED BOARD MOUNT CONNECTORS

MALE CONNECTOR

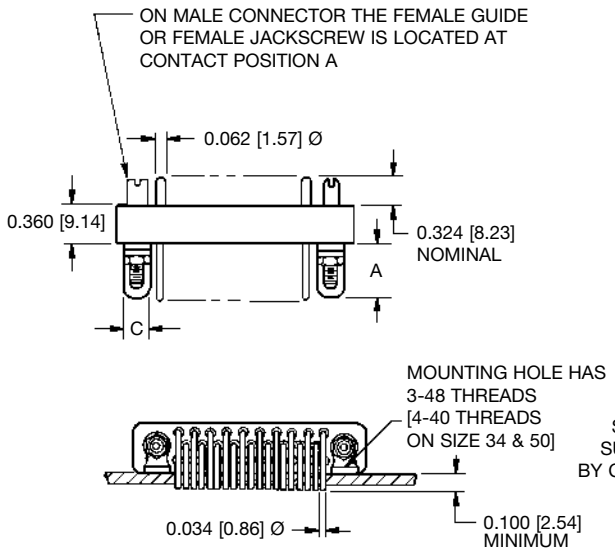

SIZE	A	B	C
9	0.290 [7.37]	0.212 [5.38]	0.156 [3.96]
14	0.290 [7.37]	0.212 [5.38]	0.156 [3.96]
18	0.290 [7.37]	0.212 [5.38]	0.156 [3.96]
20	0.290 [7.37]	0.212 [5.38]	0.156 [3.96]
26	0.290 [7.37]	0.212 [5.38]	0.156 [3.96]
34	0.417 [10.59]	0.303 [7.70]	0.220 [5.59]
41	0.290 [7.37]	0.212 [5.38]	0.156 [3.96]
50	0.417 [10.59]	0.303 [7.70]	0.220 [5.59]

ADD 0.030 [0.76] TO "B" DIMENSION WHEN MOUNTING BRACKET (LB) AND VIBRATION LOCK TAB (V) ARE USED IN COMBINATION ON CONNECTOR

(V) TAB NOT AVAILABLE ON SIZE 50

CONTACTS NOW SHOWN FOR CLARITY

STANDARD POSITION OF INSULATOR REQUIRES CONTACT "A" TO BE ADJACENT TO THE PRINTED BOARD

FOR FACE DIMENSIONS OF INSULATOR VARIANT DESIRED, SEE GM SERIES INSULATOR DIMENSION PAGE

RIGHT ANGLE PRINTED BOARD MOUNT CONNECTORS

FEMALE CONNECTOR

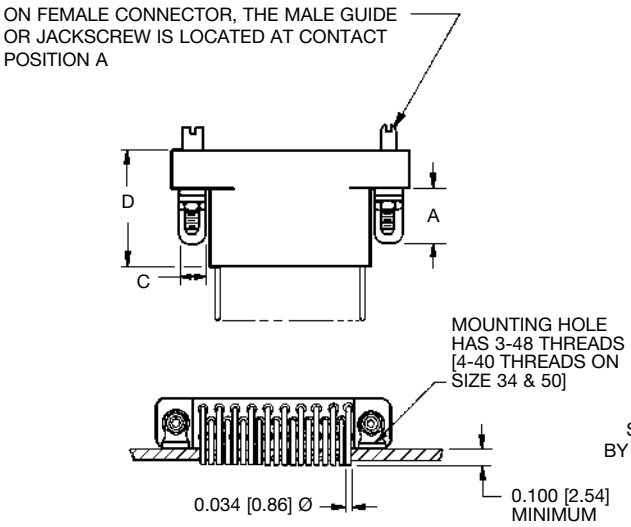

SIZE	A	B	C	D
9	0.290 [7.37]	0.212 [5.38]	0.156 [3.96]	0.856 [21.74]
14	0.290 [7.37]	0.212 [5.38]	0.156 [3.96]	0.877 [22.28]
18	0.290 [7.37]	0.212 [5.38]	0.156 [3.96]	0.877 [22.28]
20	0.290 [7.37]	0.212 [5.38]	0.156 [3.96]	0.856 [21.74]
26	0.290 [7.37]	0.212 [5.38]	0.156 [3.96]	0.877 [22.28]
34	0.417 [10.59]	0.303 [7.70]	0.220 [5.59]	0.856 [21.74]
41	0.290 [7.37]	0.212 [5.38]	0.156 [3.96]	0.877 [22.28]
50	0.417 [10.59]	0.303 [7.70]	0.220 [5.59]	0.856 [21.74]

ADD 0.030 [0.76] TO "B" DIMENSION WHEN MOUNTING BRACKET (LB) AND VIBRATION LOCK TAB (V) ARE USED IN COMBINATION ON CONNECTOR

(V) TAB NOT AVAILABLE ON SIZE 50

CONTACTS NOW SHOWN FOR CLARITY

STANDARD POSITION OF INSULATOR REQUIRES CONTACT "A" TO BE ADJACENT TO THE PRINTED BOARD

FOR FACE DIMENSIONS OF INSULATOR VARIANT DESIRED, SEE GMCT SERIES INSULATOR DIMENSION PAGE

CONTACT MATERIAL: COPPER ALLOY

CONTACT FINISH: GOLD FLASH OVER NICKEL

DIMENSIONS ARE IN INCHES [MILLIMETERS].
ALL DIMENSIONS ARE SUBJECT TO CHANGE.

HEAVY-DUTY RECTANGULAR RIGHT ANGLE PRINTED BOARD CONNECTORS

MALE RIGHT ANGLE PRINTED BOARD HOLE PATTERN

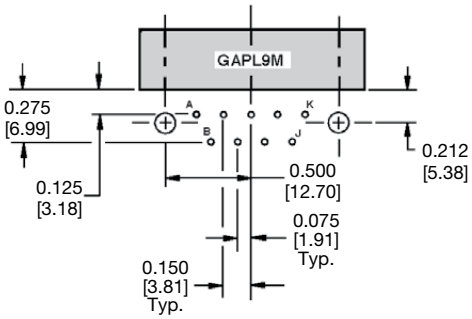

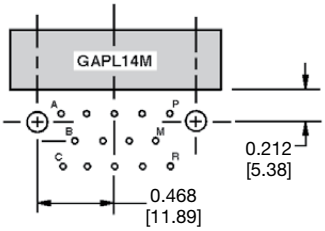

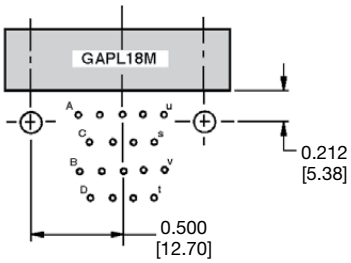

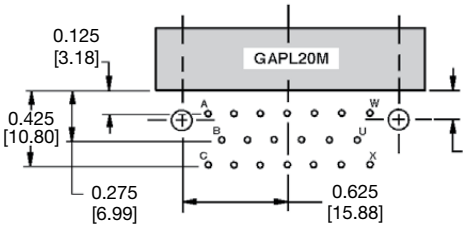

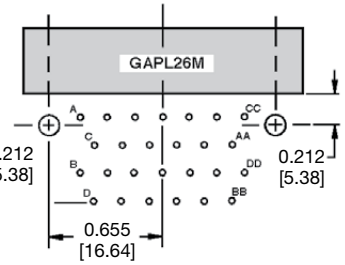

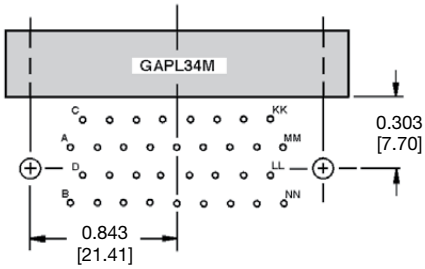

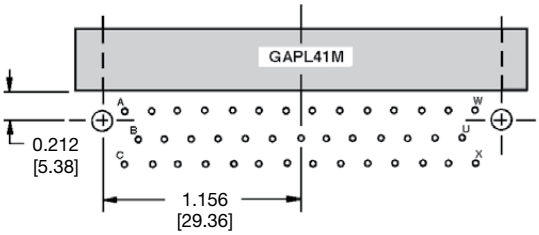

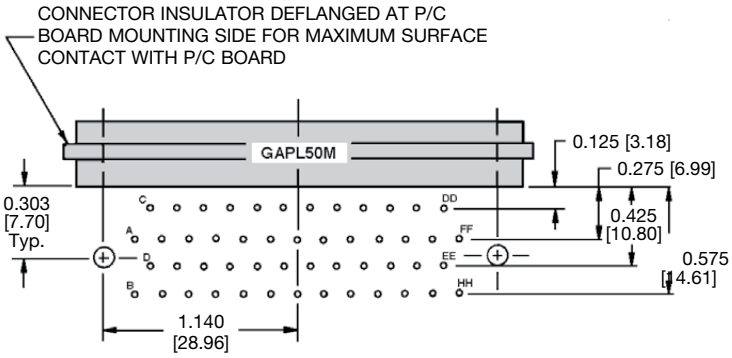

SUGGEST 0.109 [2.77] Ø HOLES IN PRINTED BOARD FOR CONNECTOR MOUNTING HOLES FOR VARIANTS 9, 14, 18, 20, 26 AND 41

SUGGEST 0.125 [3.18] Ø HOLES IN PRINTED BOARD FOR CONNECTOR MOUNTING HOLES FOR VARIANTS 34 AND 50

SUGGEST 0.052 [1.32] Ø HOLES IN PRINTED BOARD FOR CONTACT TERMINATIONS

ADD 0.030 [0.76] TO THE MOUNTING HOLE POSITION WHEN MOUNTING BRACKET (LB) AND VIBRATION LOCK TAB (V) ARE USED IN COMBINATION ON CONNECTOR

FEMALE RIGHT ANGLE PRINTED BOARD HOLE PATTERN

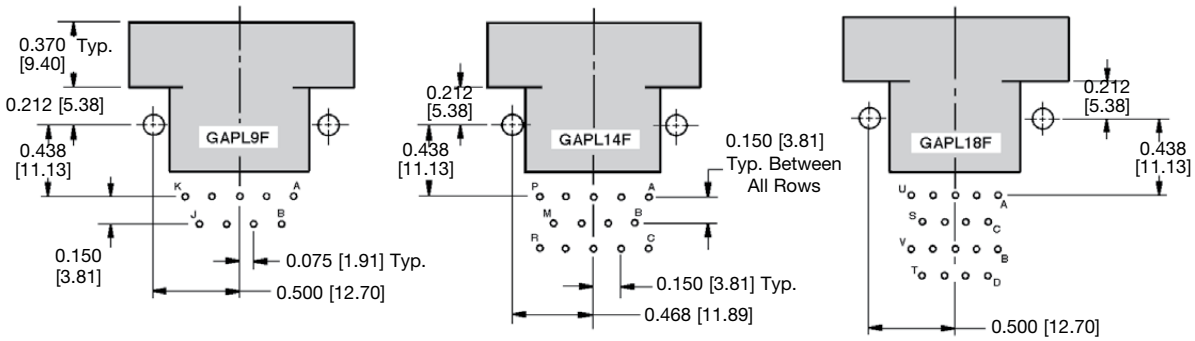

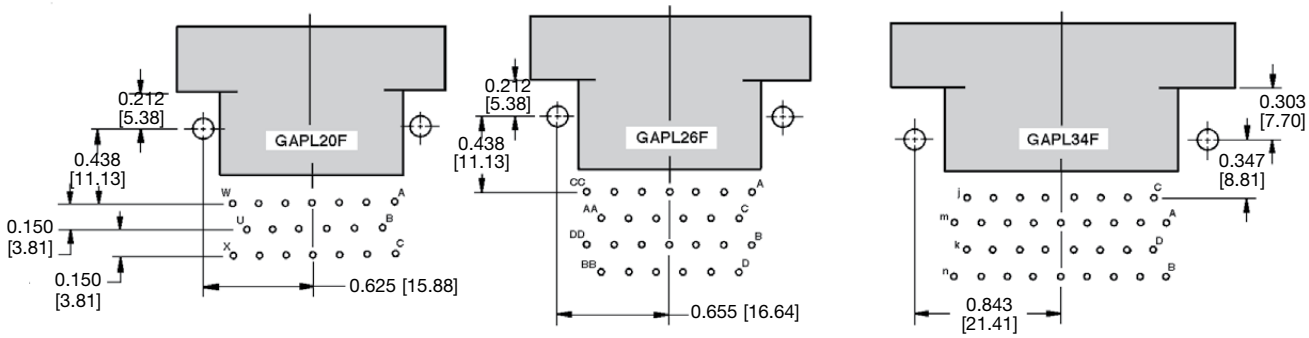

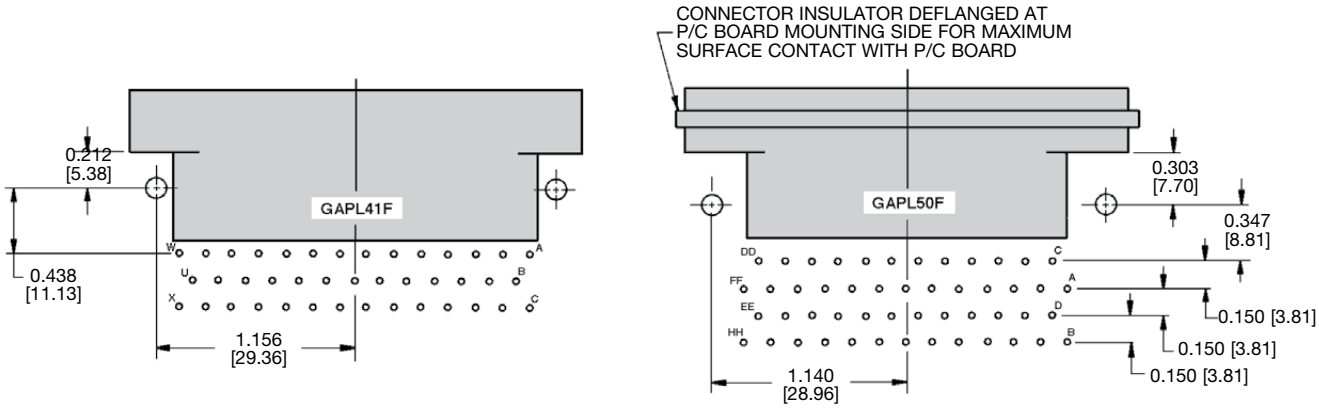

SUGGEST 0.109 [2.77] Ø HOLES IN PRINTED BOARD FOR CONNECTOR MOUNTING HOLES FOR VARIANTS 9, 14, 18, 20, 26 AND 41

SUGGEST 0.125 [3.18] Ø HOLES IN PRINTED BOARD FOR CONNECTOR MOUNTING HOLES FOR VARIANTS 34 AND 50

SUGGEST 0.052 [1.32] Ø HOLES IN PRINTED BOARD FOR CONTACT TERMINATIONS

ADD 0.030 [0.76] TO THE MOUNTING HOLE POSITION WHEN MOUNTING BRACKET (LB) AND VIBRATION LOCK TAB (V) ARE USED IN COMBINATION ON CONNECTOR

**DIMENSIONS ARE IN INCHES [MILLIMETERS].
ALL DIMENSIONS ARE SUBJECT TO CHANGE.**

HEAVY-DUTY RECTANGULAR RIGHT ANGLE PRINTED BOARD CONNECTORS

MOUNTING BRACKET (LB)

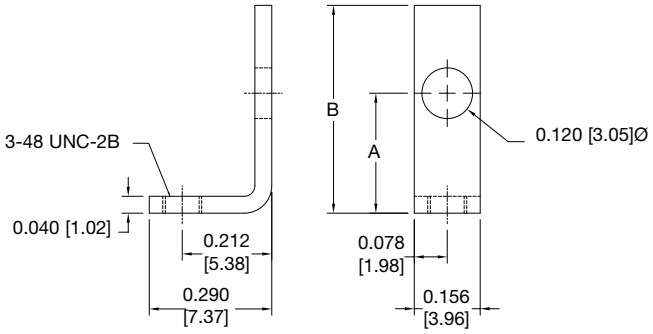

SIZE	A	B
9	0.188 [4.78]	0.299 [7.59]
14	0.219 [5.56]	0.330 [8.38]
18	0.284 [7.21]	0.395 [10.03]
20	0.219 [5.56]	0.330 [8.38]
26	0.284 [7.21]	0.395 [10.03]
41	0.219 [5.556]	0.330 [8.38]

USE ON CONNECTOR VARIANTS 9, 14, 18, 20, 26 AND 41

MATERIAL: COPPER ALLOY
FINISH: ZINC PLATE WITH CHROMATE SEAL

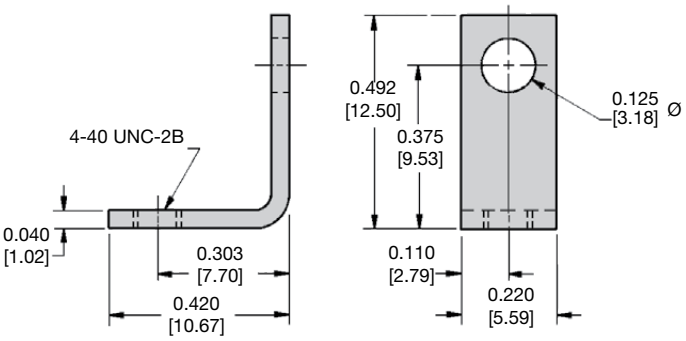

USE ON CONNECTOR VARIANTS 34 AND 50

MATERIAL: COPPER ALLOY
FINISH: ZINC PLATE WITH CHROMATE SEAL

PUSH-ON FASTENER FOR RIVETED ON RIGHT ANGLE MOUNTING BRACKETS (LN, LN2)

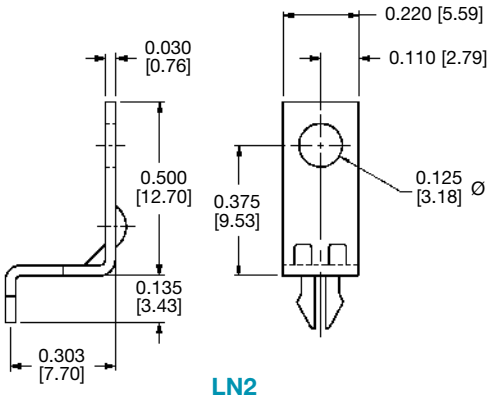

LN2

MATERIAL: COPPER ALLOY, TIN PLATE

SUGGEST 0.123 ±0.003 [3.12] Ø HOLE FOR MOUNTING CONNECTOR WITH PUSH-ON FASTENER

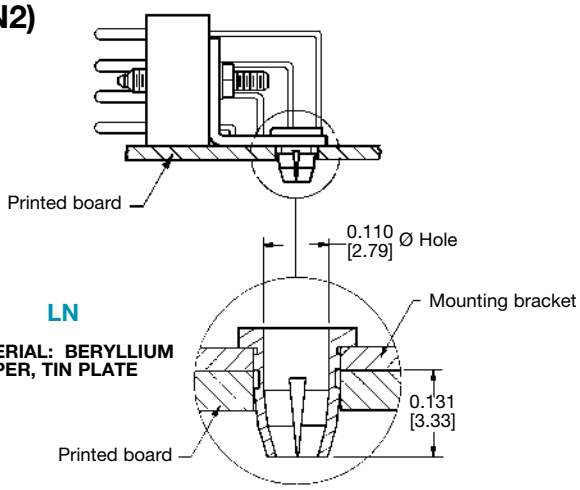

LN

MATERIAL: BERYLLIUM COPPER, TIN PLATE

SAMPLE #	PRINTED BRD. HOLE Ø	INSERTION FORCE (lbs.)	RETENTION FORCE (lbs.)
1	0.120 [3.05]	7 1/4	5 3/4
2	0.123 [3.12]	5 3/4	5 1/2
3	0.125 [3.18]	2 3/4	2 1/2
4	0.128 [3.25]	1 3/4	2 1/4
5	0.126 [3.20] PLATED	1 3/4	2 1/4

ORDERING INFORMATION - CODE NUMBERING SYSTEM

Specify Complete Connector By Selecting An Option From Step 1 Through 7

STEP	1	2	3	4	5	6	7	8		9
EXAMPLE	GAPL	14	M	0	N	V	LB	/AA	—	-14

STEP 1 - BASIC SERIES

GAPL Series.

STEP 2 - CONNECTOR VARIANTS

9, 14, 18, 20, 26, 34, 41, 50

STEP 3 - CONNECTOR GENDER

M - Male Insulator
F - Female Insulator

STEP 4 - CONTACT TERMINATION TYPE

0 - Standard termination.

*STEP 5 - POLARIZING GUIDES AND JACKSCREW SYSTEM

G - Polarizing grounding guides.
N - Polarizing guides.
NSS - Stainless steel polarizing guides.
T - Fixed jackscrews.
0 - If no polarizing guides or jackscrews are required.

*STEP 6 - LOCKING DEVICES

V - Lock tab.
VL - Lock lever.
0 - If no locking devices are required.

*STEP 7 - MOUNTING BRACKET

LB - Mounting bracket.
LN - Mounting bracket with push-on fastener, offered on size 34 and 50 only.
LN2 - Mounting bracket with push-on fastener, offered on size 34 and 50 only.
0 - If no mounting bracket is required.

STEP 8 - ENVIRONMENTAL COMPLIANCE OPTIONS

/AA - Compliant per EU Directive 2002/95/EC (RoHS)

NOTE: If compliance to environmental legislation is not required, this step will not be used. Example: GAPL14M0NVLB

STEP 9 - SPECIAL OPTIONS

-14 – Contacts plated 0.000030 [0.76µ] gold over nickel.

-50 – Contacts plated 0.000050 [1.27µ] gold over copper.

CONTACT TECHNICAL SALES FOR SPECIAL OPTIONS

***NOTE:** For details of items listed in steps 5 through 7, see heavy-duty rectangular connector accessories section on pages 44-59.

DIMENSIONS ARE IN INCHES [MILLIMETERS].
ALL DIMENSIONS ARE SUBJECT TO CHANGE.

HEAVY-DUTY RECTANGULAR CCITT V.35 INTERFACE CONNECTORS

Size 16 Contacts Connectors Qualified to MIL-DTL-28748

Contacts Qualified to SAE AS 39029

IEC Publication 807-7 ISO International Standard 2593

U.L. Recognized, File #E49351
Telecommunication U.L. File #E140980

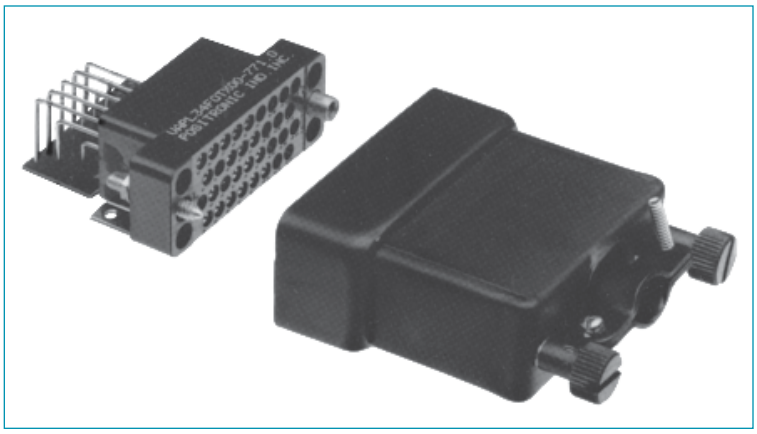

VMCT and VAPL series connectors are high reliability connectors meeting international standards for CCITT V.35 interfacing. To meet these specifications, VMCT and VAPL series connectors come in 34 position glass filled DAP insulators with 0.062 inch [1.57mm] diameters, size 16 contacts rated to 13 amperes.
VMCT Series connectors are offered in crimp, solder cup, printed board mount and press-fit terminations. VAPL Series connectors have right angle printed board mount terminations. VMCT and VAPL series connectors meet performance requirements for MIL-DTL-28748 and SAE AS 39029.

A wide array of mounting, locking, shrouding and polarizing accessories is available for these connectors. For details, see the Heavy-Duty Rectangular Connector Accessories section, GMCT 34 variant.
VMCT and VAPL series connectors were specifically designed to satisfy requirements for V.35 interfacing and high speed data transmission found in the telecommunications, modem and computer industries. These connectors fully comply with the contact and jackscrew system requirements of ISO standard 2593, as revised by ISO TC 97/SC6 N 2599 and 3236.

V.35 SERIES TECHNICAL CHARACTERISTICS

VMCT SERIES CONNECTORS WITH REMOVABLE CONTACTS

MILITARY SPECIFICATIONS:

Qualified to MIL-DTL-28748/3 and MIL-DTL-28748/4. Contacts qualified to SAE AS 39029/34 and SAE AS 39029/35.

INTERNATIONAL STANDARDS:

IEC 807-1 and IEC 807-7.
U.L. Recognized.

MATERIALS AND FINISHES:

Insulator: Glass filled DAP per ASTM-D-5948 type SDG-F. Grey color is standard, black available.

Removable Contacts: Copper alloy with gold flash over nickel. Military contacts plated 0.000050 inch [1.27 microns] gold over copper. Other finishes available upon request.

Hoods, Cable Adapters: Aluminum with yellow or black anodize. Steel with zinc plate and chromate seal.

Shells: Aluminum with yellow or black anodize.

Jackscrew System: Passivated stainless steel.

Polarizing Guides: Copper alloy with nickel plate or passivated stainless steel.

Vibration Locks: Copper alloy with zinc plate and chromate seal.

MECHANICAL CHARACTERISTICS:

Removable Contacts: Insert contact to rear face of insulator, release from front face of insulator. Size 16 [13 amps.] contacts available. Female contact has "closed entry" design for highest reliability.

Contact Retention in Insulator: 20 lbs. [89N] after 10 cycles of contact insertion extraction.

Contact Termination: Crimp all wire sizes from 14 AWG [2.5 mm^2] through 32 AWG [0.03 mm^2]. Solder cup, press-fit and printed board mount.

Locking Systems: Friction, vibration locks and jackscrews.

Polarization: Polarized guides, polarized shells and jackscrew system.

Mechanical Operations: 1000 operations per IEC 512-5.

Jackscrews: Standard threads, 6-32 UNC. Metric threads, M3X0.5 available.

ELECTRICAL CHARACTERISTICS:

Contact Current Rating: Size 16: 0.062 inch [1.57 mm] diameter – 13 amps nominal.

Initial Contact Resistance: Size 16 – 0.003 ohms.

Flash over Voltage: 2700 V.AC [rms].

Test Voltage: Size 16 – 2000 V.AC [rms].

Insulation Resistance (minimum): 5 G ohms.

Clearance and Creepage Distance (minimum): 0.080 inch [2.03 mm].

Working Temperature: -55°C to 125°C.

Working Voltage: 250 V.AC [rms].

POSITRONIC INDUSTRIES RoHS Compliant per EU Directive 2002/95/EC

For RoHS options see page 36.

DIMENSIONS ARE IN INCHES [MILLIMETERS].
ALL DIMENSIONS ARE SUBJECT TO CHANGE.

VAPL SERIES TECHNICAL CHARACTERISTICS

MILITARY SPECIFICATIONS:

Conforms to MIL-DTL-28748.

INTERNATIONAL STANDARDS:

IEC 807-1 and IEC 807-7.
U.L. Recognized.

MATERIALS AND FINISHES:

Insulator:	Glass filled DAP per ASTM-D-5948 type SDG-F. Grey color is standard, black available.
Fixed Contacts:	Copper alloy, gold flash over nickel.
Jackscrew System:	Passivated stainless steel.
Polarizing Guides:	Copper alloy with nickel plate or passivated stainless steel.
Vibration Locks:	Copper alloy with zinc plate and chromate seal.

POSITRONIC INDUSTRIES RoHS Compliant per EU Directive 2002/95/EC

For RoHS options see page 37.

MECHANICAL CHARACTERISTICS:

Fixed Contacts:	**Male** – Size 16: 0.062 inch [1.57 mm] diameter. **Female** – "Closed entry" design for highest reliability.
Contact Retention in Insulator:	10 lbs. [44.5N] minimum.
Contact Termination:	Right angle printed board mounted.
Locking Systems:	Friction, vibration locks and jackscrews.
Polarization:	Polarized guides and jackscrew system.
Mechanical Operations:	1000 operations per IEC 512-5.
Jackscrews:	Standard threads, 6-32 UNC. Metric threads, M3X0.5 available.

ELECTRICAL CHARACTERISTICS:

Contact Current Rating:	7.5 amps. limited at contact termination diameter.
Initial Contact Resistance:	0.003 ohms.
Flash over Voltage:	2500 V.AC [rms].
Test Voltage:	1200 V.AC [rms].
Insulation Resistance (minimum):	5 G ohms.
Clearance and Creepage Distance (minimum):	0.047 inch [1.19 mm].
Working Temperature:	-55°C to 125°C.
Working Voltage:	250 V.AC [rms].

VMCT/VAPL SERIES TYPICAL CONNECTOR MATING ASSEMBLY

SEE PAGE 64 FOR EMI/RFI SHIELDED HOOD ASSEMBLY.

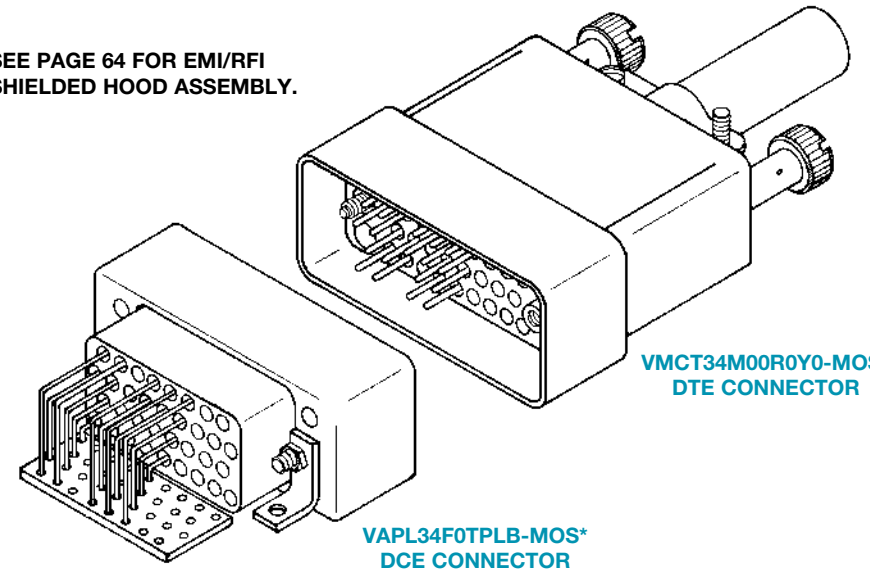

*** MOS DESIGNATES THE NUMBERING SYSTEM FOR SPECIAL CUSTOMER REQUIREMENTS. SELECTIVE LOADING OF CONTACTS FOR V.35 CONNECTORS IS ACHIEVED THROUGH THIS SYSTEM. PLEASE CONTACT TECHNICAL SALES FOR DETAILS.**

DIMENSIONS ARE IN INCHES [MILLIMETERS].
ALL DIMENSIONS ARE SUBJECT TO CHANGE.

VMCT SERIES CONNECTOR INSULATOR DIMENSIONS

FEMALE CONNECTOR

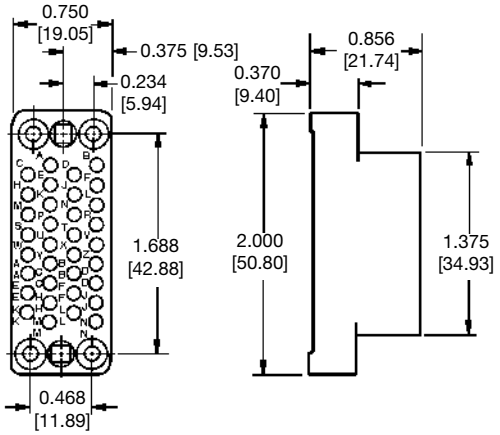

MALE CONNECTOR

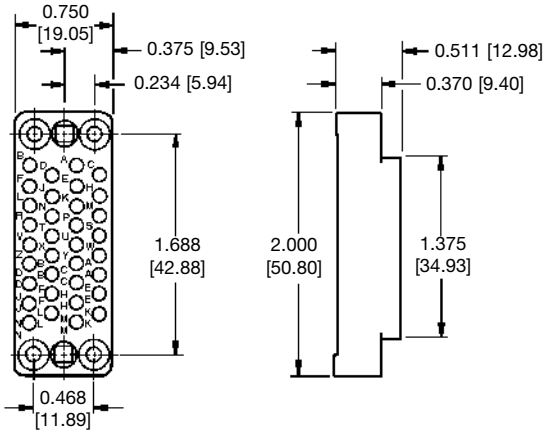

FOR VMCT [V.35] SERIES CONTACTS, SEE GMCT SERIES CONTACT SECTION

FOR VMCT SERIES CONTACT HOLE POSITIONS, SEE GMCT SERIES CONTACT HOLE POSITIONS, PAGE 7

MATERIAL: **GLASS FILLED DIALLYL PHTHALATE PER ASTM-D-5948 TYPE SDG-F**

VAPL SERIES RIGHT ANGLE PRINTED BOARD MOUNT CONNECTORS

FEMALE CONNECTOR

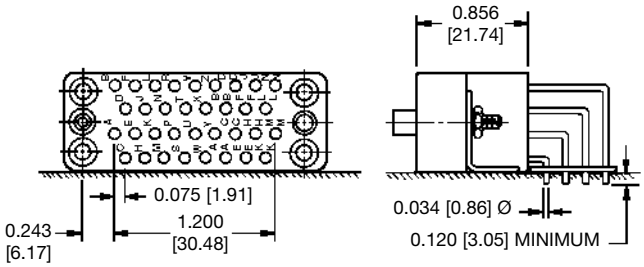

MALE CONNECTOR

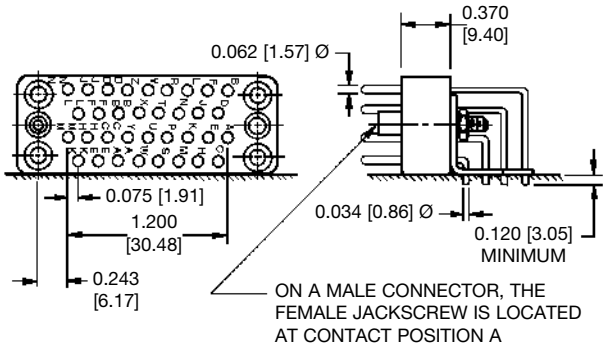

VAPL SERIES RIGHT ANGLE PRINTED BOARD HOLE PATTERN

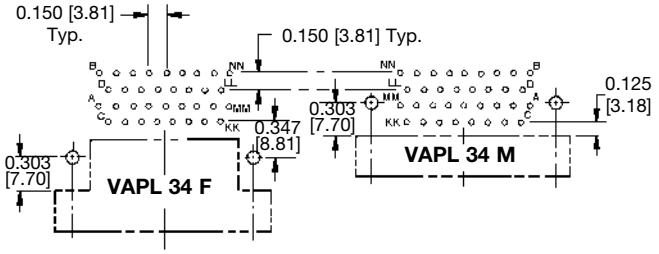

FOR MOUNTING BRACKET DIMENSIONS SEE GAPL SERIES, GAPL 34 VARIANT, PAGE 30

SUGGEST 0.052 [1.32] Ø HOLES IN PRINTED BOARD FOR CONTACT TERMINATIONS

SUGGEST 0.125 [3.18] Ø HOLES IN PRINTED BOARD FOR CONNECTOR MOUNTING HOLES

DIMENSIONS ARE IN INCHES [MILLIMETERS].
ALL DIMENSIONS ARE SUBJECT TO CHANGE.

DIMENSIONS ARE IN INCHES [MILLIMETERS].
ALL DIMENSIONS ARE SUBJECT TO CHANGE.

HEAVY-DUTY RECTANGULAR CCITT V.35 INTERFACE CONNECTORS

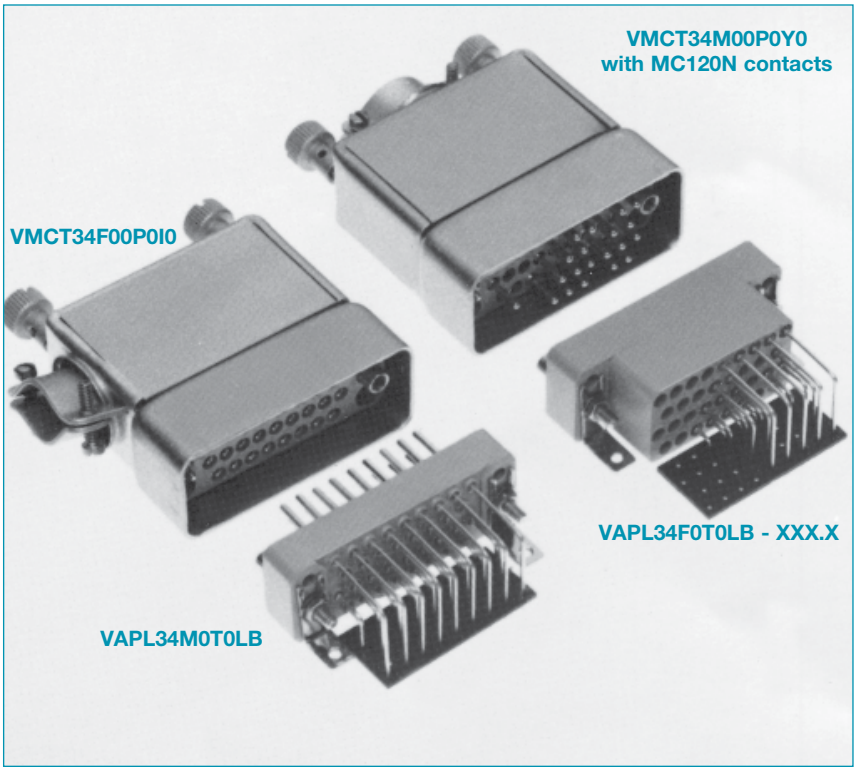

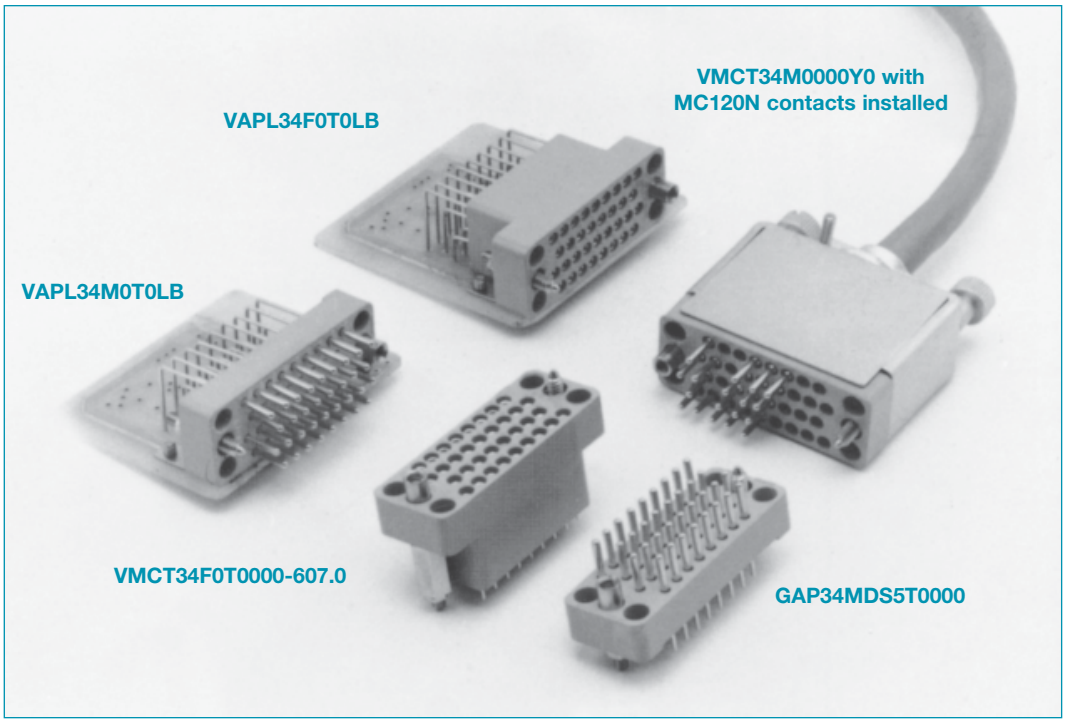

DIMENSIONS ARE IN INCHES [MILLIMETERS].
ALL DIMENSIONS ARE SUBJECT TO CHANGE.

ORDERING INFORMATION - CODE NUMBERING SYSTEM

Specify Complete Connector By Selecting An Option From Step 1 Through 9

VMCT SERIES

STEP	1	2	3	4	5	6	7	8	9	10		11
EXAMPLE	VMCT	34	F	0	0	R	B	Z	0	/AA	—	

STEP 1 - BASIC SERIES

VMCT Series (V.35).

STEP 2 - CONNECTOR VARIANTS

34

STEP 3 - CONNECTOR GENDER

M - Male Insulator
F - Female Insulator

STEP 4 - CONTACT TERMINATION TYPE

All Female contacts "closed entry" design.
0 - Contacts to be ordered separately, see contact ordering charts.

*STEP 5 - POLARIZING GUIDES AND JACKSCREW SYSTEM

G - Polarizing grounding guides.
N - Polarizing guides.
NSS - Stainless steel polarizing guides.
T - Fixed jackscrews.
E - Short turnable jackscrews, offered with set screw option.
EL - Long turnable jackscrews, offered with set screw option.
0 - If no polarizing guides or jackscrews are required. Also, use "0" if ordering hoods equipped with jackscrews, see STEP 8.

*STEP 6 - SHELLS AND MOUNTING PLATES

P - Male shell.
R - Female shell.
H - Mounting plate.
W - Male shell with mounting plate.
U - Female shell with mounting plate.
0 - If no shells or mounting plates are required.

*STEP 7 - POLARIZATION POSITIONS OF SHELLS

Select letter to designate position of male pin and female slot for polarization system.

A, B, C, D, E, F, G
0 - If no polarization is required or if no shells are required.

*STEP 8 - CABLE ADAPTERS (HOODS)

J - Top opening hood (formed).
L - Side opening hood (formed).
Y - Top opening hood (formed), equipped with stainless steel jackscrew system.
I - Side opening hood (formed), equipped with stainless steel jackscrew system.
Z - Top opening hood (drawn, side access), equipped with stainless steel jackscrew system.
V - Side opening hood (drawn, side access), equipped with stainless steel jackscrew system.
0 - If no hoods are required.

*STEP 9 - ADDITIONAL FEATURES

B - For black anodized aluminum parts.
C - Set screw option, offered on the E and EL jackscrew systems.
R - For chemical conversion coating on aluminum parts.
V - Lock tab.
VL - Lock lever.
FB - Floating bushings for mounting plate.
0 - If no additional options are required.

STEP 10 - ENVIRONMENTAL COMPLIANCE OPTIONS

/AA - Compliant per EU Directive 2002/95/EC (RoHS)

NOTE: If compliance to environmental legislation is not required, this step will not be used. Example: VMCT34F00RBZ0

STEP 11 - SPECIAL OPTIONS

CONTACT TECHNICAL SALES FOR SPECIAL OPTIONS

***NOTE:** For details of items listed in steps 5 through 9, see heavy-duty rectangular connector accessories section, gmct 34 variant, pages 44-59.

ORDERING INFORMATION - CODE NUMBERING SYSTEM

Specify Complete Connector By Selecting An Option From Step 1 Through 7

VAPL SERIES

STEP	1	2	3	4	5	6	7	8		9
EXAMPLE	VAPL	34	F	0	T	0	LB	/AA	—	-14

STEP 1 - BASIC SERIES

VAPL Series (V.35).

STEP 2 - CONNECTOR VARIANTS

34

STEP 3 - CONNECTOR GENDER

M - Male Insulator
F - Female Insulator

STEP 4 - CONTACT TERMINATION TYPE

0 - Standard termination.

*STEP 5 - POLARIZING GUIDES AND JACKSCREW SYSTEM

G - Polarizing grounding guides.
N - Polarizing guides.
NSS - Stainless steel polarizing guides.
T - Fixed jackscrews.
0 - If no polarizing guides or jackscrews are required.

*STEP 6 - LOCKING DEVICES

V - Lock tab.
VL - Lock lever.
0 - If no locking devices are required.

*STEP 7 - MOUNTING BRACKET

LB - Mounting bracket.
LN - Mounting bracket with push-on fastener.
LN2 - Mounting bracket with one-piece bracket and push-on fastener.
0 - If no mounting bracket is required.

STEP 8 - ENVIRONMENTAL COMPLIANCE OPTIONS

/AA - Compliant per EU Directive 2002/95/EC (RoHS)

NOTE: If compliance to environmental legislation is not required, this step will not be used. Example: VAPL34F0T0LB

STEP 9 - SPECIAL OPTIONS

-14 – Contacts plated 0.000030 [0.76µ] gold over nickel.

-50 – Contacts plated 0.000050 [1.27µ] gold over copper.

CONTACT TECHNICAL SALES FOR SPECIAL OPTIONS

***NOTE:** For details of items listed in steps 5 through 7, see heavy-duty rectangular connector accessories section, GMCT 34 variant on pages 44-59.

FOR MOUNTING BRACKET DIMENSIONS, SEE GAPL SERIES, GAPL 34 VARIANT

DIMENSIONS ARE IN INCHES [MILLIMETERS].
ALL DIMENSIONS ARE SUBJECT TO CHANGE.

Standard
Density
Rectangular

RECTANGULAR CONNECTORS WITH FIXED SOLDER CONTACTS

Positronic Industries
connectpositronic.com

Size 20 Contacts

Qualified to MIL-DTL-28748

IEC Publication 807-6

U.L. Recognized
File #E49351

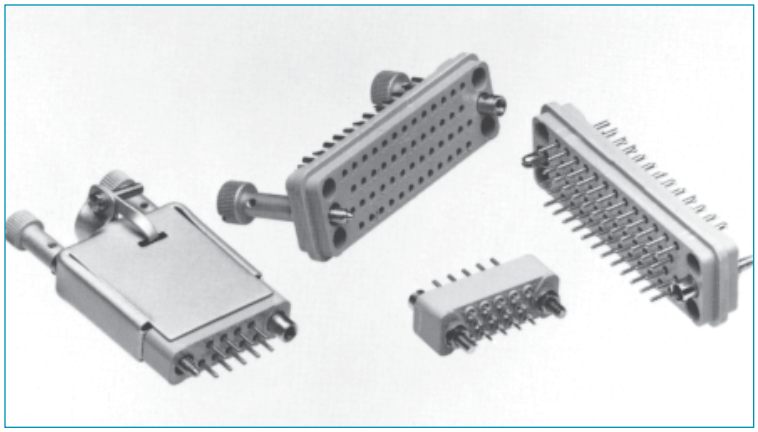

GM Series connectors are multi-pole, high reliability connectors qualified to MIL-DTL-28748 specifications. Contacts are 0.040 inch [1.02mm] diameters, rated to 7.5 amperes per contact. Termination styles are solder cup and straight solder printed board mount. Eleven connector variants, seven through 50 poles, are offered.

A wide array of mounting, locking, shrouding and polarizing accessories is available for this series. For details, see the Heavy-Duty Rectangular Connector Accessories section.

The GM Series is a popular choice of engineers in all areas of electronics and is widely utilized in navigational systems, robotics, mainframe and peripheral computers, medical equipment, telecommunications, instrumentation and process control applications.

GM Series connectors may not be mateable with GMCT Series connectors and contacts, contact Technical Sales.

GM SERIES TECHNICAL CHARACTERISTICS

MILITARY SPECIFICATIONS:

Qualified to MIL-DTL-28748/5 and MIL-DTL-28748/6.

INTERNATIONAL STANDARDS:

IEC 807-6.
U.L. Recognized.

MATERIALS AND FINISHES:

Insulator:	Glass filled DAP per ASTM-D-5948 type SDG-F. Grey color is standard, black available.
Fixed Contacts:	**Solder** - Copper alloy, gold flash over nickel. **Printed Board Mounted** - Copper alloy, gold flash over nickel. **Military** - Copper alloy, 0.000050 inch [1.27 microns] gold over nickel. Other finishes available upon request.
Hoods, Cable Adapters:	Aluminum with yellow or black anodize.
Shells:	Aluminum with yellow or black anodize.
Jackscrew System:	Passivated stainless steel.
Polarizing Guides:	Copper alloy with nickel plate or passivated stainless steel.
Vibration Locks:	Copper alloy with zinc plate and chromate seal.

POSITRONIC INDUSTRIES RoHS Compliant per EU Directive 2002/95/EC

For RoHS options see page 50.

MECHANICAL CHARACTERISTICS:

Fixed Contacts:	**Male** - Size 20: 0.040 inch [1.02 mm^2] diameter. **Female** - Open entry is standard. "Closed entry" available on solder cup style for high reliability applications.
Contact Retention in Insulator:	10 lbs. [44.5N] minimum.
Contact Termination:	0.046 inch [1.17 mm] internal diameter on solder cup style contact for 20 AWG [0.5 mm^2] wire maximum. 0.025 inch [0.64 mm] diameter printed board mount style contact.
Locking Systems:	Friction, vibration locks and jackscrews.
Polarization:	Polarized guides, polarized shells and jackscrew system.
Mechanical Operations:	With "closed entry" female contacts, 500 operations per IEC 512-5.
Jackscrews:	Standard threads, 6-32 UNC. Metric threads, M3X0.5 available.

ELECTRICAL CHARACTERISTICS:

Contact Current Rating (maximum):	7.5 amps.
Initial Contact Resistance:	0.010 ohms.
Flash over Voltage:	2500 V.AC [rms].
Test Voltage:	1200 V.AC [rms].
Insulation Resistance (minimum):	5 G ohms.
Clearance and Creepage Distance (minimum):	0.047 inch [1.19 mm].
Working Temperature:	-55°C to 125°C.
Working Voltage:	300 V.AC [rms].

DIMENSIONS ARE IN INCHES [MILLIMETERS].
ALL DIMENSIONS ARE SUBJECT TO CHANGE.

Positronic Industries
connectpositronic.com

RECTANGULAR CONNECTORS WITH FIXED SOLDER CONTACTS

Standard
Density
Rectangular

SOLDER CUP CONTACTS

CONTACT MATERIAL: COPPER ALLOY

CONTACT FINISH: GOLD FLASH OVER NICKEL
"CLOSED ENTRY" FEMALE CONTACT AVAILABLE

SPECIFY CODE "CE" IN STEP 10 OF ORDERING INFORMATION

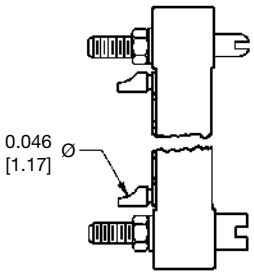

Typical Part Number: GM14FSCN0000

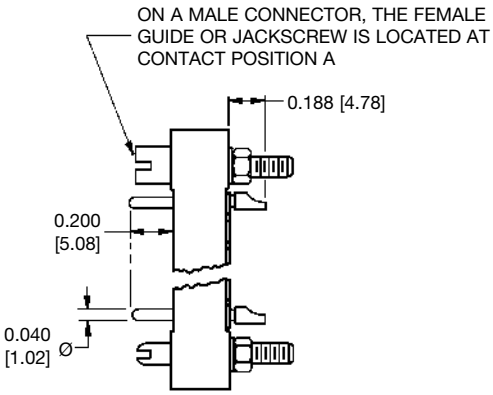

Typical Part Number: GM14MSCN0000

STRAIGHT SOLDER CONTACTS FOR PRINTED BOARD MOUNT

CONTACT MATERIAL: COPPER ALLOY

CONTACT FINISH: GOLD FLASH OVER NICKEL

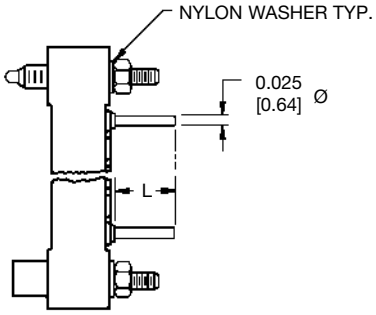

Typical Part Number: GM34FDS5T0000

CONTACT CODE	L
DS3	0.093 [2.36]
DS4	0.125 [3.18]
DS5	0.156 [3.96]
DS6	0.187 [4.75]

SEE GM SERIES PRINTED BOARD HOLE PATTERN PAGE FOR CONNECTOR VARIANT CONTACT HOLE POSITIONS

SPECIFY CONTACT CODE IN STEP 4 OF ORDERING INFORMATION FOR DESIRED LENGTH OF CONTACT TERMINATION

TYPICAL MATING ASSEMBLY

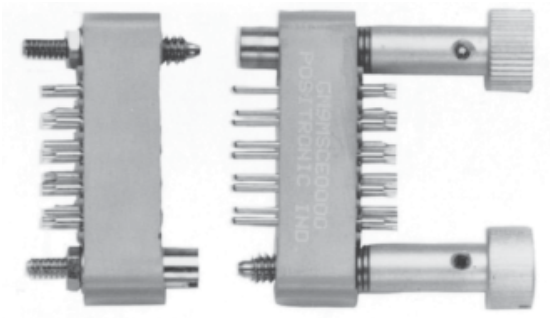

GM9FSCT0000 **GM9MSCE0000**

DIMENSIONS ARE IN INCHES [MILLIMETERS].
ALL DIMENSIONS ARE SUBJECT TO CHANGE.

INSULATOR DIMENSIONS

MATING FACE OF FEMALE CONNECTOR OR REAR FACE OF MALE CONNECTOR

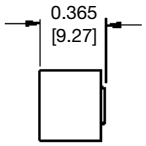

MALE AND FEMALE
PROFILE VIEW

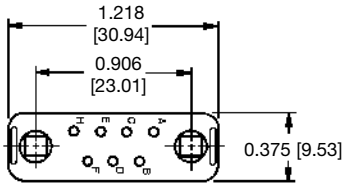

GM7

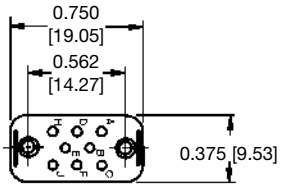

GM8

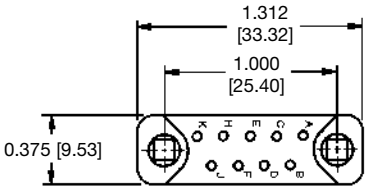

GM9

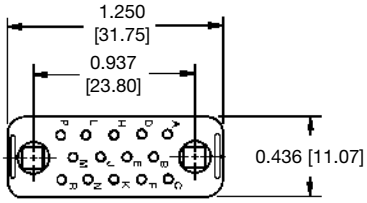

GM14

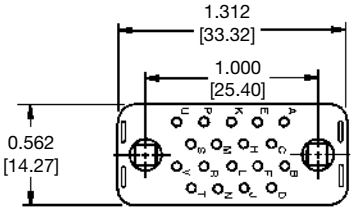

GM18

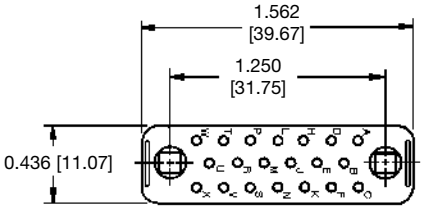

GM20

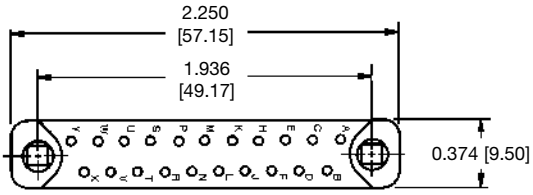

GM21

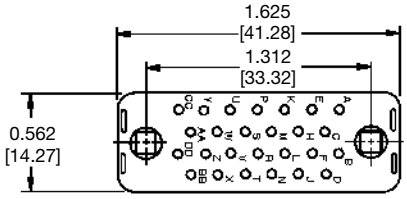

GM26

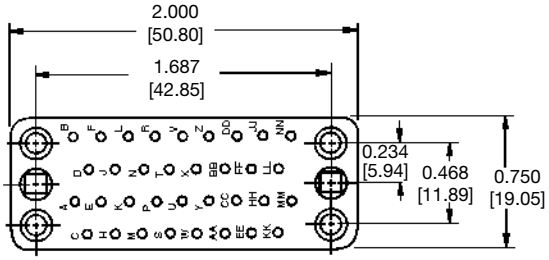

GM34

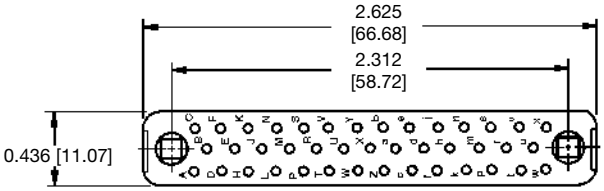

GM41

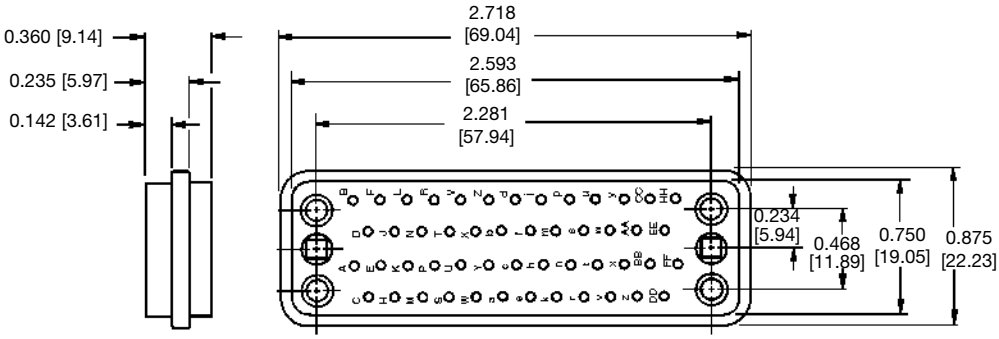

GM50

SEE GM SERIES PRINTED BOARD HOLE PATTERN PAGE FOR CONNECTOR VARIANT CONTACT HOLE POSITIONS

MATERIAL: GLASS FILLED DIALLYL PHTHALATE PER ASTM-D-5948 TYPE SDG-F

CONTACT HOLE POSITION DIMENSIONS AND PRINTED BOARD HOLE PATTERN

MATING FACE OF FEMALE CONNECTOR OR REAR FACE OF MALE CONNECTOR

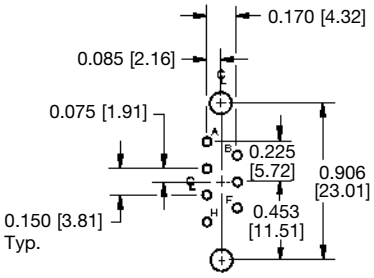

SIZE 7

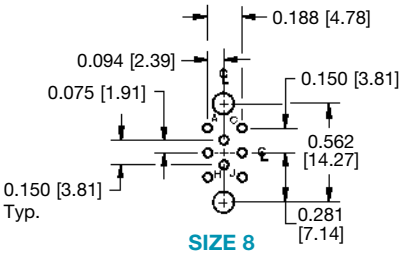

SIZE 8

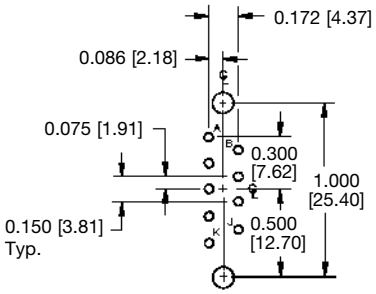

SIZE 9

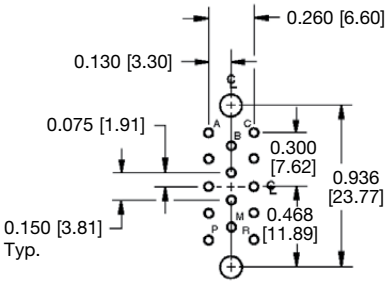

SIZE 14

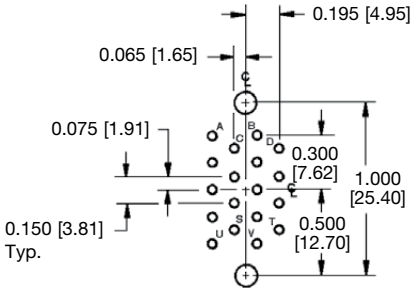

SIZE 18

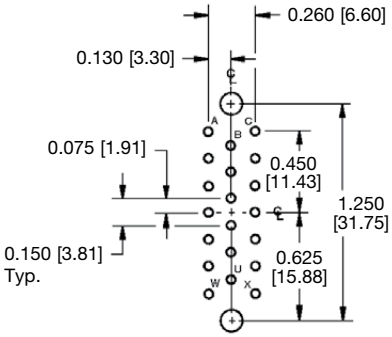

SIZE 20

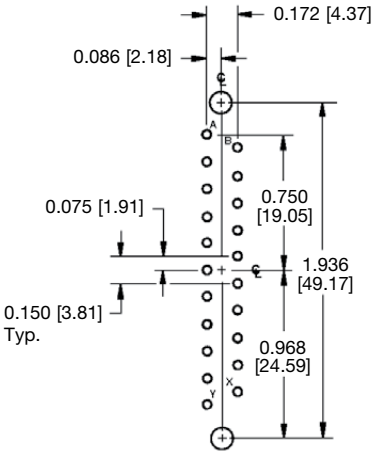

SIZE 21

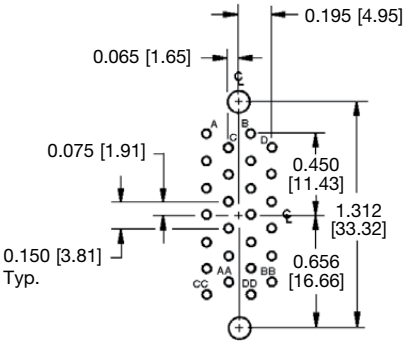

SIZE 26

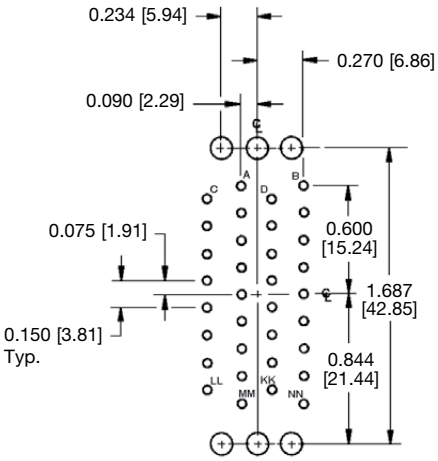

SIZE 34

SUGGEST 0.120 [3.05] Ø HOLES IN PRINTED BOARD FOR CONNECTOR MOUNTING HOLES
SUGGEST 0.040 [1.02] Ø HOLE IN PRINTED BOARD FOR CONTACT TERMINATIONS

HOLE IDENTIFICATION FOR REFERENCE ONLY

DIMENSIONS ARE IN INCHES [MILLIMETERS].
ALL DIMENSIONS ARE SUBJECT TO CHANGE.

CONTACT HOLE POSITION DIMENSIONS AND PRINTED BOARD HOLE PATTERN

MATING FACE OF FEMALE CONNECTOR OR REAR FACE OF MALE CONNECTOR

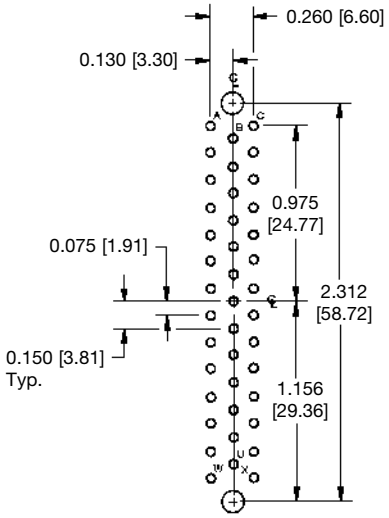

SIZE 41

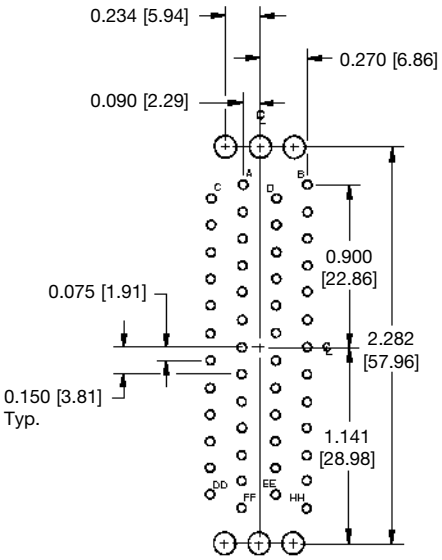

SIZE 50

SUGGEST 0.120 [3.05] Ø HOLES IN PRINTED BOARD FOR CONNECTOR MOUNTING HOLES

SUGGEST 0.040 [1.02] Ø HOLE IN PRINTED BOARD FOR CONTACT TERMINATIONS

HOLE IDENTIFICATION FOR REFERENCE ONLY

TYPICAL MATING ASSEMBLY

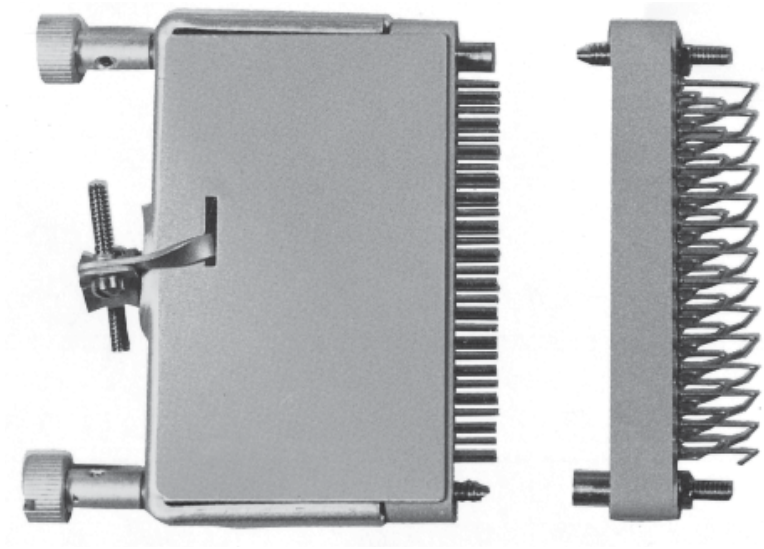

GM41MSCE100J0 GMPL41F0T00

Positronic Industries
connectpositronic.com

RECTANGULAR CONNECTORS WITH FIXED SOLDER CONTACTS

Standard
Density
Rectangular

ORDERING INFORMATION - CODE NUMBERING SYSTEM

Specify Complete Connector By Selecting An Option From Step 1 Through 9

STEP	1	2	3	4	5	6	7	8	9	10		11
EXAMPLE	GM	41	M	SC	E1	0	0	J	0	/AA	—	-14

STEP 1 - BASIC SERIES

GM Series.

STEP 2 - CONNECTOR VARIANTS

7, 8, 9, 14, 18, 20, 21, 26, 34, 41, 50

STEP 3 - CONNECTOR GENDER

M - Male insulator.
F - Female insulator.

STEP 4 - CONTACT TERMINATION TYPE

SC - Solder cup, for closed entry female contact specify 'CE' in Step 10.
DS3 - Straight solder 0.093 [2.36].
DS4 - Straight solder 0.125 [3.18].
DS5 - Straight solder 0.156 [3.96].
DS6 - Straight solder 0.187 [4.75].

*STEP 5 - POLARIZING GUIDES AND JACKSCREW SYSTEM

G - Polarizing grounding guides.
N - Polarizing guides, only option offered for size 8 connectors
NSS - Stainless steel polarizing guides.
T - Fixed jackscrews.
E - Short turnable jackscrews, offered with set screw option.
EL - Long turnable jackscrews, offered with set screw option.
E1 - Turnable jackscrews used on 9, 14, 18, 20, 21, 26 and 41 variant hoods, offered with set screw option.
0 - If no polarizing guides or jackscrews are required. Also, use "0" if ordering hoods equipped with jackscrews for sizes 34 and 50, see Step 8.

*STEP 6 - SHELLS AND MOUNTING PLATES

P - Male shell, not available on 41 variant.
R - Female shell, not available on 41 variant.
H - Mounting plate, not available on 41 variant.
W - Male shell with mounting plate.
U - Female shell with mounting plate.
0 - If no shells or mounting plates are required.

***NOTE:** FOR DETAILS OF ITEMS LISTED IN STEPS 5 THROUGH 9, SEE HIGH DENSITY RECTANGULAR CONNECTOR ACCESSORIES SECTION ON PAGES 44-59.

*STEP 7 - POLARIZATION POSITIONS OF SHELLS

Select letter to designate position of male pin and female slot for polarization system.
A, B, C, D, E, F, G
0 - If no polarization is required or if no shells are required.

*STEP 8 - CABLE ADAPTERS (HOODS)

J - Top opening hood (formed).
L - Side opening hood (formed).
Y - Top opening hood (formed), equipped with stainless steel jackscrew system, offered on 34 and 50 variants.
I - Side opening hood (formed), equipped with stainless steel jackscrew system, offered on 34 and 50 variants.
Z - Top opening hood (drawn, side access), equipped with stainless steel jackscrew system, offered on 34 and 50 variants.
V - Side opening hood (drawn, side access), equipped with stainless steel jackscrew system, offered on 34 and 50 variants.
0 - If no hoods are required.

*STEP 9 - ADDITIONAL FEATURES

B - For black anodized aluminum parts.
C - Set screw option, offered on the E, EL and E1 jackscrew systems.
R - For chemical conversion coating on aluminum parts.
V - Lock tab, offered on 7, 9, 14, 18, 20, 21, 26, 34 and 41 variants.
VL - Lock lever, offered on 7, 9, 14, 18, 20, 21, 26, 34 and 41 variants.
0 - If no additional options are required.

STEP 10 - ENVIRONMENTAL COMPLIANCE OPTIONS

/AA - Compliant per EU Directive 2002/95/EC (RoHS)

NOTE: If compliance to environmental legislation is not required, this step will not be used. Example: GM41MSCE100J0

STEP 11 - SPECIAL OPTIONS

-14 – Contacts plated 0.000030 [0.76µ] gold over nickel.

-50 – Contacts plated 0.000050 [1.27µ] gold over copper.

CONTACT TECHNICAL SALES FOR SPECIAL OPTIONS

DIMENSIONS ARE IN INCHES [MILLIMETERS].
ALL DIMENSIONS ARE SUBJECT TO CHANGE.

VIBRATION LOCKS (V,VL)

(V) - VIBRATION TABS

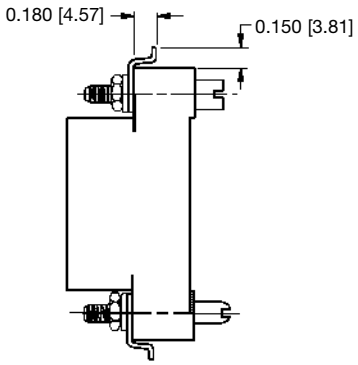

Typical Part Number:
GMCT34F0N000V

(VL) - VIBRATION LEVER ASSEMBLY

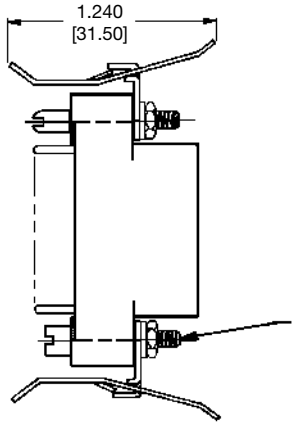

SPECIFY CODE "V" OR "VL" IN STEP 9 OF ORDERING INFORMATION

MATERIAL: COPPER ALLOY

FINISH: ZINC PLATE WITH CHROMATE SEAL

ON MALE CONNECTOR THE FEMALE GUIDE OR JACKSCREW IS LOCATED AT CONTACT POSITION A OR NO. 1

Typical Part Number:
GMCT34M0N000VL

TYPICAL MATING ASSEMBLY

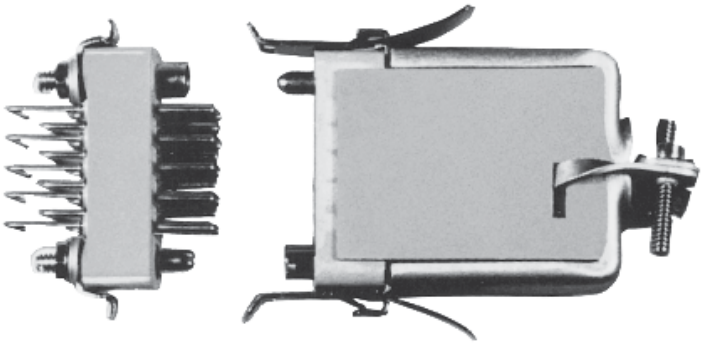

GAPL14M0NVLB GMCT14F0N00JVL

FLUSH PANEL CONNECTOR MOUNTING BRACKETS

MATERIAL: COPPER ALLOY

FINISH: ZINC WITH CHROMATE SEAL

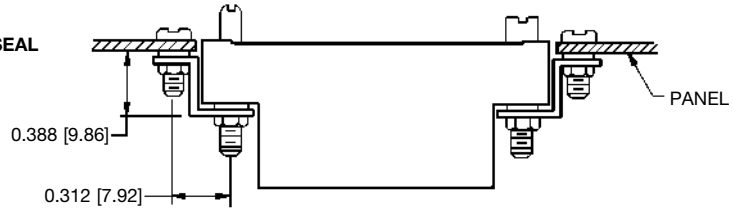

CONNECTOR VARIANTS	PART NUMBER
7 THRU 75	80023-2
60 AND 104	80023-4

DIMENSIONS ARE IN INCHES [MILLIMETERS].
ALL DIMENSIONS ARE SUBJECT TO CHANGE.

JACKSCREW SYSTEM DIMENSIONS (T, E, EL, ESS)

QUALIFIED TO MIL-DTL-28748

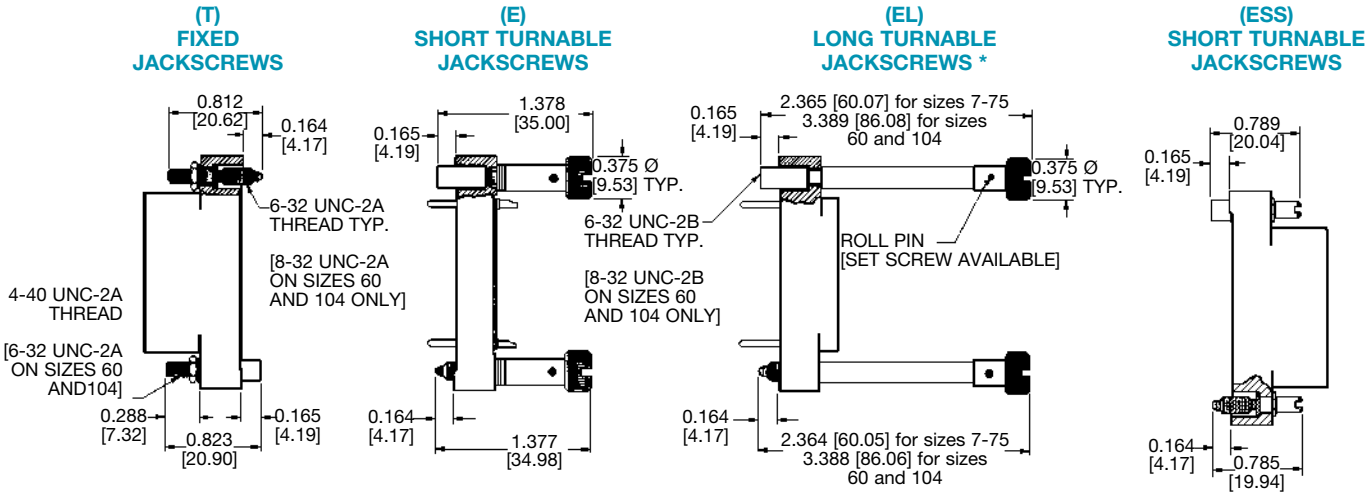

(STAINLESS STEEL) (STAINLESS STEEL WITH ALUMINUM KNOBS) (STAINLESS STEEL WITH ALUMINUM TUBES AND KNOBS) (STAINLESS STEEL)

"E" AND "EL" OPTIONS USING ROLL PINS MAY HAVE SOLID WIRE THREADED THROUGH THE ROLL PINS AS AN ANTI-ROTATION MEASURE.

*** WHEN SUPPLIED WITH A FEMALE OR MALE SHELL, THE JACKSCREW MATING LENGTHS 0.164 [4.17] SHALL BE 0.124 [3.15] AND THE 0.165 [4.19] SHALL BE 0.125 [3.18]**

METRIC THREADS AVAILABLE, SEE PAGE 55

ON A MALE CONNECTOR, THE FEMALE GUIDE OR FEMALE JACKSCREW IS LOCATED AT THE END WITH CONTACT POSITION A OR NO. 1

POLARIZING GUIDE DIMENSIONS (N, NSS, G)

QUALIFIED TO MIL-DTL-2874

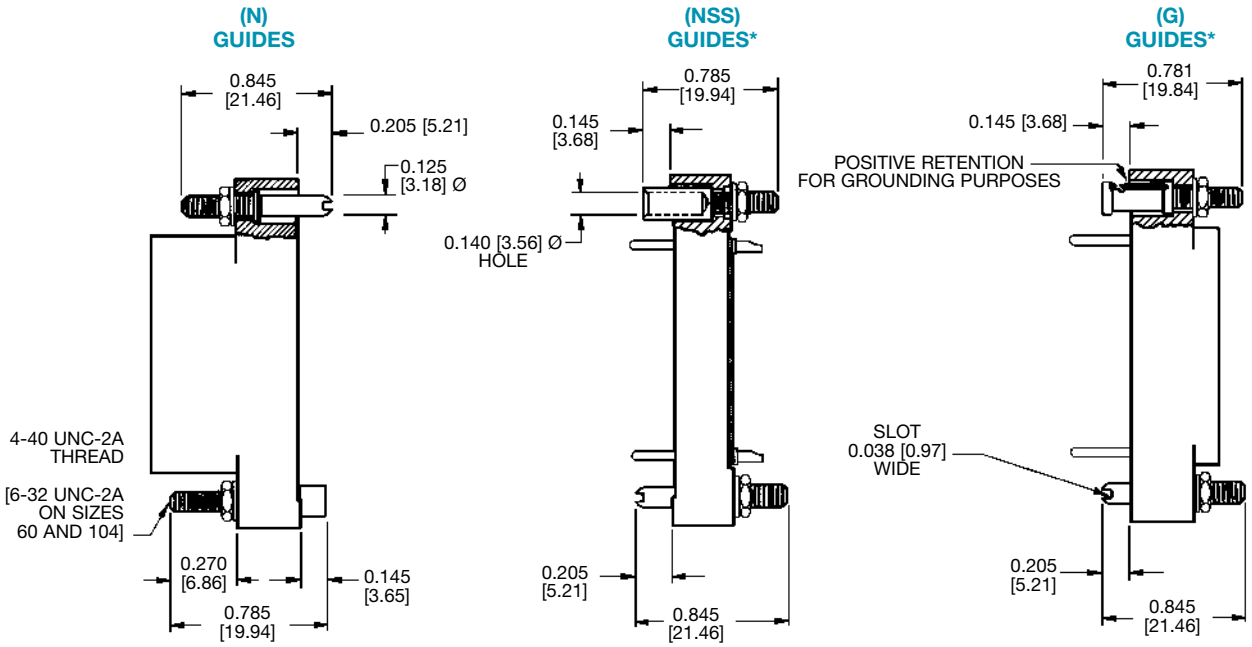

(COPPER ALLOY) (STAINLESS STEEL) (COPPER ALLOY)

ON A MALE CONNECTOR, THE FEMALE GUIDE OR FEMALE JACKSCREW IS LOCATED AT THE END WITH CONTACT POSITION A OR NO. 1

METRIC THREADS AVAILABLE, SEE PAGE 55

***NOT OFFERED ON GM8 CONNECTOR VARIANT**

**DIMENSIONS ARE IN INCHES [MILLIMETERS].
ALL DIMENSIONS ARE SUBJECT TO CHANGE.**

ACCESSORIES FOR RECTANGULAR CONNECTORS

POLARIZING GUIDES (N, NSS, G)

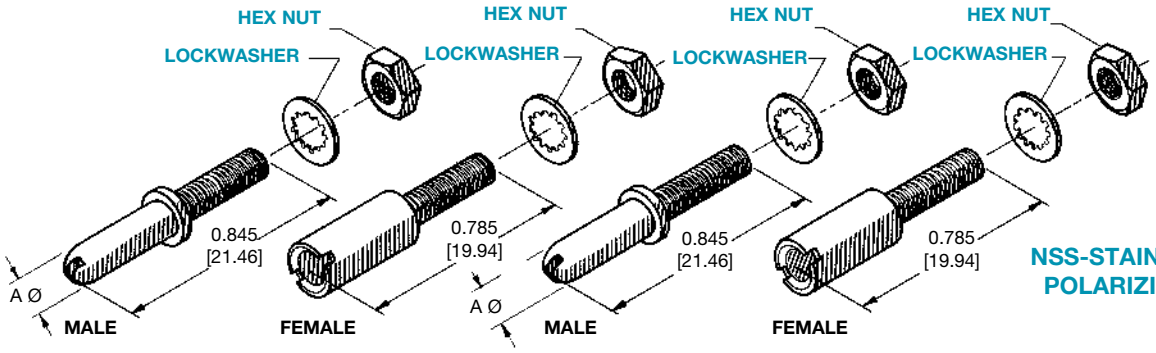

N-POLARIZING GUIDES

NSS-STAINLESS STEEL POLARIZING GUIDES

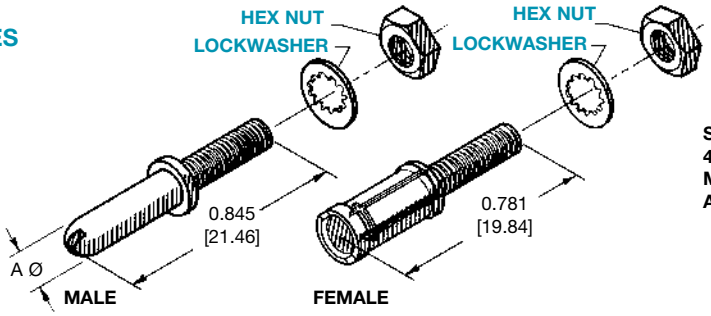

G-POLARIZING GROUNDING GUIDES

STUD THREAD OF 4-40 UNC-2A IS STANDARD, METRIC THREADS AVAILABLE UPON REQUEST

NUT DRIVER

Part Number: 9535-1 FOR 4-40 THREADS
Part Number: 9535-2 FOR 6-32 THREADS

TYPE	MATERIAL AND FINISH	USED ON CONNECTOR VARIANTS	A Ø
N-GUIDE MALE	COPPER ALLOY WITH NICKEL PLATE	7 AND 9 THROUGH 75	0.124 [3.15]
		60 AND 104	0.124 [3.15]
N-GUIDE FEMALE	COPPER ALLOY WITH NICKEL PLATE	7 AND 9 THROUGH 75	——
		60 AND 104	——
NSS-GUIDE MALE	STAINLESS STEEL PASSIVATED	7 AND 9 THROUGH 75	0.124 [3.15]
		60 AND 104	0.124 [3.15]
NSS-GUIDE FEMALE	STAINLESS STEEL PASSIVATED	7 AND 9 THROUGH 75	——
		60 AND 104	——
G-GUIDE MALE	COPPER ALLOY WITH NICKEL PLATE	7 AND 9 THROUGH 75	0.124 [3.15]
		60 AND 104	0.124 [3.15]
G-GUIDE FEMALE	COPPER ALLOY WITH NICKEL PLATE	7 AND 9 THROUGH 75	——
		60 AND 104	——

FIXED AND TURNABLE JACKSCREW SYSTEM (T, E, EL)

SEE PAGE 55 FOR THREAD INFORMATION

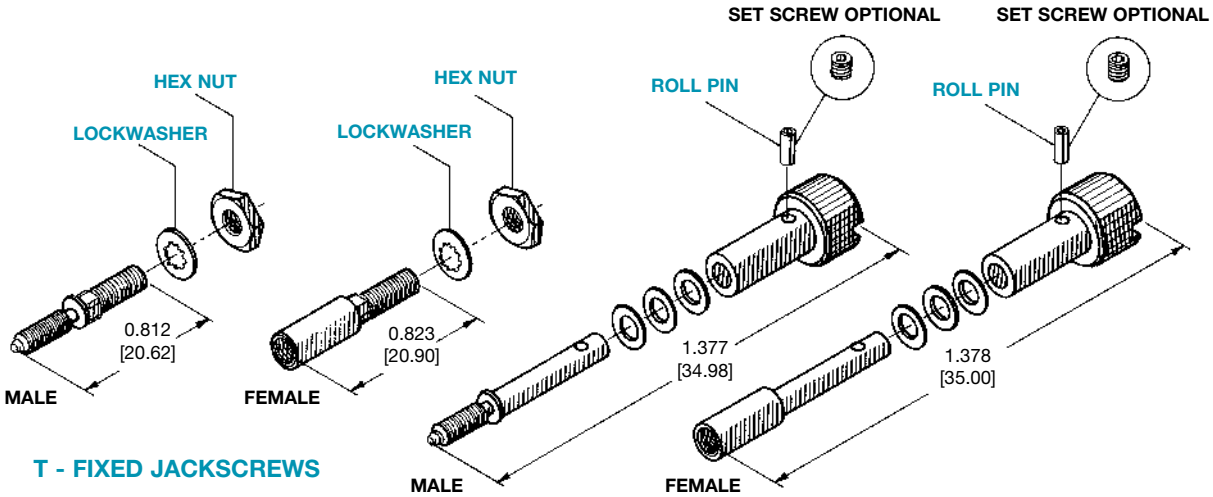

T - FIXED JACKSCREWS

E - SHORT TURNABLE JACKSCREWS

"E" AND "EL" OPTIONS USING ROLL PINS MAY HAVE SOLID WIRE THREADED THROUGH THE ROLL PINS AS AN ANTI-ROTATION MEASURE.

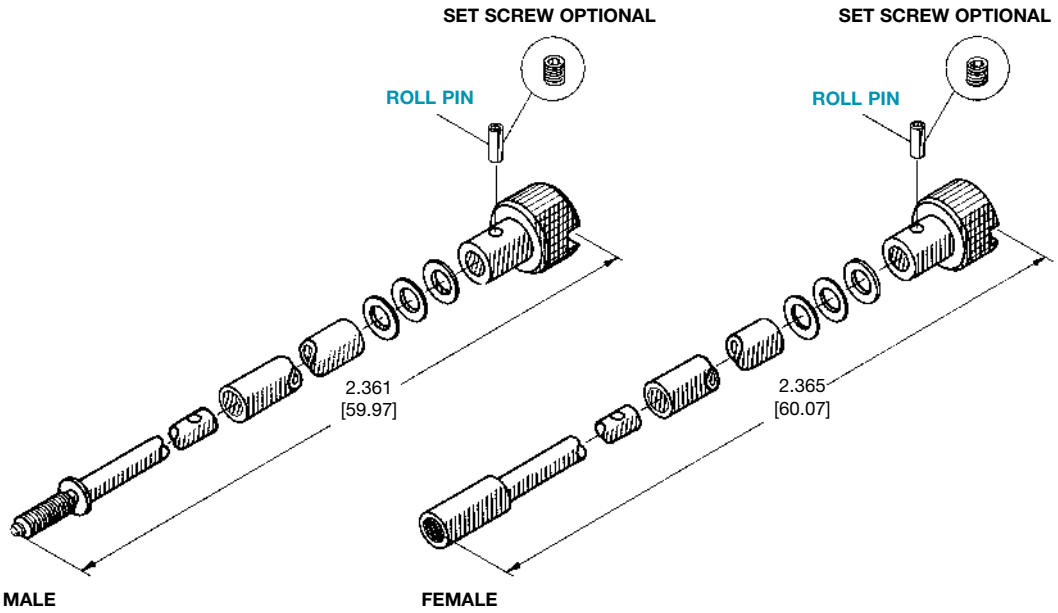

EL - LONG TURNABLE JACKSCREWS

**DIMENSIONS ARE IN INCHES [MILLIMETERS].
ALL DIMENSIONS ARE SUBJECT TO CHANGE.**

FIXED AND TURNABLE JACKSCREW SYSTEMS (T, E, EL)

COUPLING THREAD SIZES ONLY

TYPE	MATERIAL AND FINISH	AVAILABILITY M3x0.5			USED ON CONNECTOR VARIANTS
		6-32 THREAD	8-32 THREAD	M3x0.5 METRIC THD.	
T JACKSCREW MALE	STAINLESS STEEL PASSIVATED	X	------	X	7 AND 9 THROUGH 75
		------	X	X	60 AND 104
T JACKSCREW FEMALE	STAINLESS STEEL PASSIVATED	X	------	X	7 AND 9 THROUGH 75
		------	X	X	60 AND 104
E JACKSCREW MALE	STAINLESS STEEL PASSIVATED	X *	------	X	7 AND 9 THROUGH 75
		------	X	X	60 AND 104
E JACKSCREW FEMALE	STAINLESS STEEL PASSIVATED	X *	------	X	7 AND 9 THROUGH 75
		------	X	X	60 AND 104
EL JACKSCREW MALE	STAINLESS STEEL PASSIVATED	X *	------	X	7 AND 9 THROUGH 75
		------	X	X	60 AND 104
EL JACKSCREW FEMALE	STAINLESS STEEL PASSIVATED	X *	------	X	7 AND 9 THROUGH 75
		------	X	X	60 AND 104

*** SET SCREW OPTION AVAILABLE ON STAINLESS STEEL TURNABLE JACKSCREWS WITH 6-32 THREADS ONLY**

POLARIZATION OF MALE AND FEMALE SHELLS

QUALIFIED TO MIL-DTL-28748

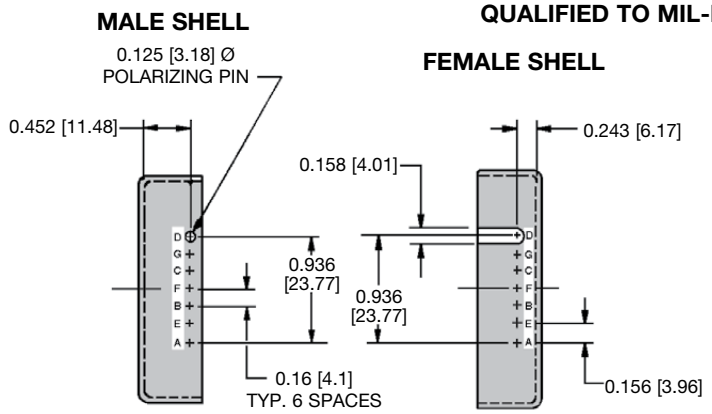

Typical Part Number:
G34000PD000

Typical Part Number:
G34000RD000

POLARIZATION

Polarization is accomplished with shells by a pin and slot arrangement. Female shells are slotted to accept non-magnetic stainless steel polarizing pins mounted on the male shells.

There are 7 polarizing positions available which are designated by the letters A, B, C, D, E, F or G. Nonpolarized shells are designated by "O" and are supplied without slot and pin. See ordering chart.

DIMENSIONS FOR FEMALE SHELLS (R)

QUALIFIED TO MIL-DTL-28748

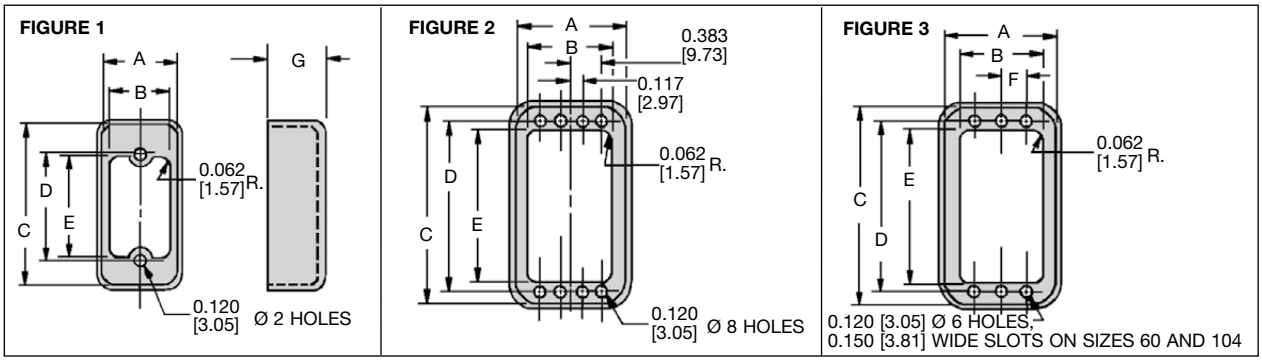

FIGURE	PART NUMBER	A	B	C	D	E	F	G
1	G9000R000	0.517 [13.13]	0.380 [9.65]	1.453 [36.91]	1.000 [25.40]	0.875 [22.23]	-----	0.719 [18.26]
1	G14000R000	0.580 [14.73]	0.445 [11.30]	1.393 [35.38]	0.938 [23.83]	0.812 [20.62]	-----	0.719 [18.26]
1	G18000R000	0.705 [17.91]	0.575 [14.61]	1.453 [36.91]	1.000 [25.40]	0.875 [22.23]	-----	0.719 [18.26]
1	G20000R000	0.580 [14.73]	0.453 [11.51]	1.707 [43.36]	1.250 [31.75]	1.125 [28.58]	-----	0.719 [18.26]
1	G26000R000	0.705 [17.91]	0.580 [14.73]	1.775 [45.09]	1.312 [33.32]	1.187 [30.14]	-----	0.719 [18.26]
3	G34000R000	0.898 [22.81]	0.763 [19.38]	2.143 [54.43]	1.688 [42.88]	1.423 [36.14]	0.234 [5.94]	0.719 [18.26]
3	G42000R000	0.895 [22.73]	0.768 [19.51]	2.458 [62.43]	2.000 [50.80]	1.750 [44.45]	0.234 [5.94]	0.719 [18.26]
3	G50000R000	1.020 [25.91]	0.763 [19.38]	2.861 [72.67]	2.281 [57.94]	2.031 [51.59]	0.234 [5.94]	0.719 [18.26]
3	G60000R000	1.688 [42.88]	1.481 [37.62]	2.905 [73.78]	2.375 [60.33]	2.075 [52.71]	0.438 [11.11]	0.719 [18.26]
3	G66000R000	1.269 [32.23]	1.130 [28.70]	2.429 [61.70]	1.969 [50.01]	1.704 [43.28]	0.250 [6.35]	0.719 [18.26]
2	G75000R000	1.375 [34.93]	1.125 [28.58]	2.865 [72.77]	2.281 [57.94]	2.031 [51.59]	-----	0.719 [18.26]
3	G104000R000	1.688 [42.88]	1.481 [37.62]	2.905 [73.78]	2.375 [60.33]	2.075 [52.71]	0.438 [11.11]	0.719 [18.26]

MATERIAL:
0.040 [1.02] THICK ALUMINUM

FINISH:
YELLOW OR BLACK ANODIZE

DIMENSIONS ARE IN INCHES [MILLIMETERS].
ALL DIMENSIONS ARE SUBJECT TO CHANGE.

ACCESSORIES FOR RECTANGULAR CONNECTORS

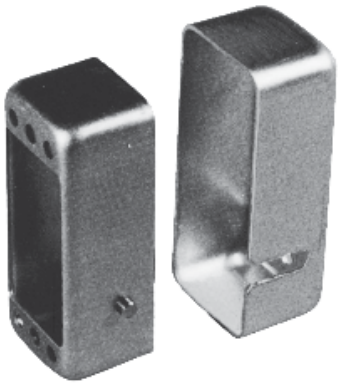

DIMENSIONS FOR MALE SHELLS (P)

QUALIFIED TO MIL-DTL-28748

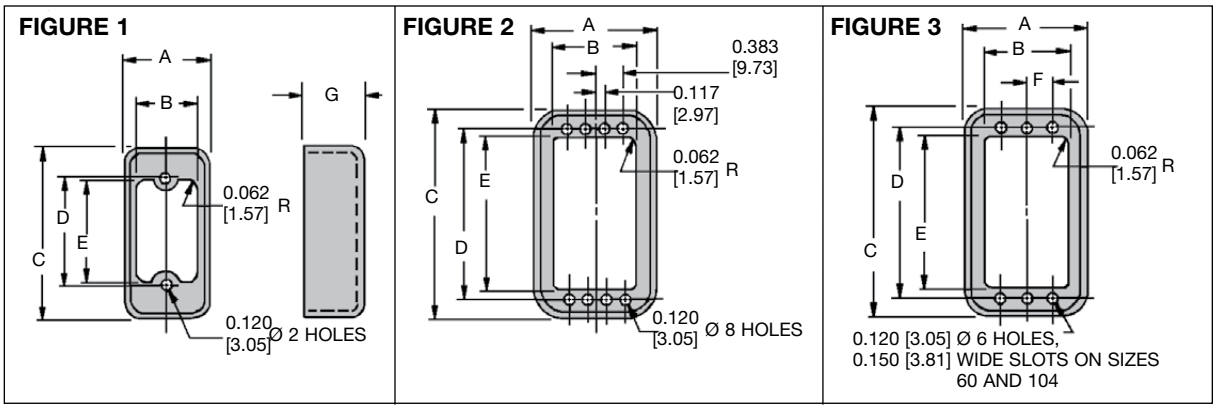

FIGURE	PART NUMBER	A	B	C	D	E	F	G
1	G9000P000	0.495 [12.57]	0.380 [9.65]	1.435 [36.45]	1.000 [25.40]	0.875 [22.23]	-----	0.719 [18.26]
1	G14000P000	0.562 [14.27]	0.445 [11.30]	1.375 [34.93]	0.938 [23.83]	0.812 [20.62]	-----	0.719 [18.26]
1	G18000P000	0.683 [17.35]	0.575 [14.61]	1.435 [36.45]	1.000 [25.40]	0.875 [22.23]	-----	0.719 [18.26]
1	G20000P000	0.562 [14.27]	0.453 [11.51]	1.687 [42.85]	1.250 [31.75]	1.125 [28.58]	-----	0.719 [18.26]
1	G26000P000	0.682 [17.32]	0.580 [14.73]	1.750 [44.50]	1.312 [33.32]	1.187 [30.14]	-----	0.719 [18.26]
3	G34000P000	0.870 [22.10]	0.763 [19.38]	2.120 [53.85]	1.688 [42.88]	1.423 [36.14]	0.234 [5.94]	0.719 [18.26]
3	G42000P000	0.875 [22.23]	0.768 [19.51]	2.432 [61.77]	2.000 [50.80]	1.750 [44.45]	0.234 [5.94]	0.719 [18.26]
3	G50000P000	1.000 [25.40]	0.763 [19.38]	2.841 [72.16]	2.281 [57.94]	2.031 [51.59]	0.234 [5.94]	0.719 [18.26]
3	G60000P000	1.665 [42.29]	1.481 [37.62]	2.885 [73.28]	2.375 [60.33]	2.075 [52.71]	0.438 [11.11]	0.719 [18.26]
3	G66000P000	1.249 [31.72]	1.130 [28.70]	2.405 [61.09]	1.969 [50.01]	1.704 [43.28]	0.250 [6.35]	0.719 [18.26]
2	G75000P000	1.355 [34.42]	1.125 [28.58]	2.845 [72.26]	2.281 [57.94]	2.031 [51.59]	-----	0.719 [18.26]
3	G104000P000	1.665 [42.29]	1.481 [37.62]	2.885 [73.28]	2.375 [60.33]	2.075 [52.71]	0.438 [11.11]	0.719 [18.26]

MATERIAL: 0.040 [1.02] THICK ALUMINUM

FINISH: YELLOW OR BLACK ANODIZE

DIMENSIONS ARE IN INCHES [MILLIMETERS].
ALL DIMENSIONS ARE SUBJECT TO CHANGE.

DIMENSIONS FOR MOUNTING PLATES (H)

QUALIFIED TO MIL-DTL-28748

Mounting plates provide a simple, economical means of mounting the connector to any supporting surface. They can be used with or without shells and are available with floating bushings for “blind mountings” to facilitate alignment and coupling of the connector.

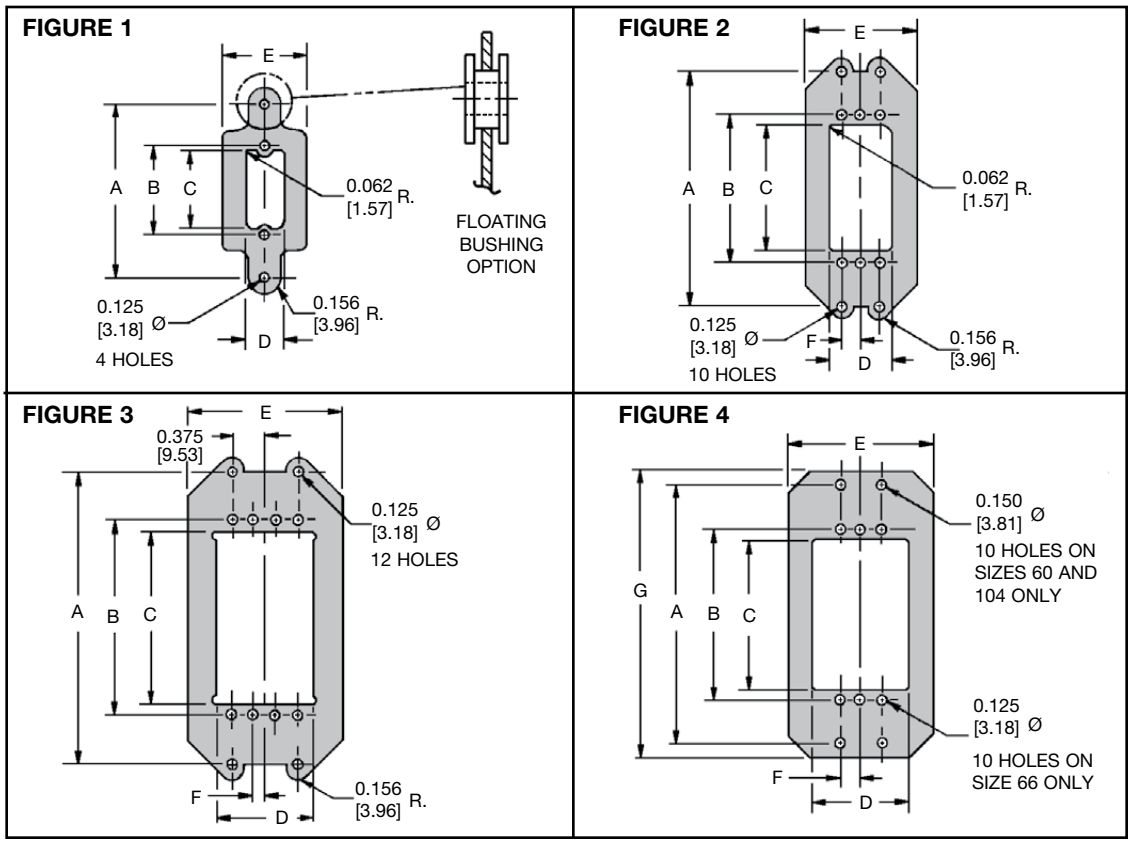

FIGURE	PART NUMBER	A	B	C	D	E	F	G
1	G9000H000	2.016 [51.21]	1.000 [25.40]	0.876 [22.25]	0.406 [10.31]	0.958 [24.33]	-----	-----
1	G14000H000	1.953 [49.61]	0.937 [23.80]	0.812 [20.62]	0.469 [11.91]	1.015 [25.78]	-----	-----
1	G18000H000	2.016 [51.21]	1.000 [25.40]	0.875 [22.23]	0.594 [15.09]	1.141 [28.98]	-----	-----
1	G20000H000	2.266 [57.56]	1.250 [31.75]	1.125 [28.58]	0.468 [11.89]	1.016 [25.81]	-----	-----
1	G26000H000	2.328 [59.13]	1.312 [33.32]	1.188 [30.18]	0.594 [15.09]	1.140 [28.96]	-----	-----
2	G34000H000	2.703 [68.66]	1.687 [42.85]	1.438 [36.53]	0.750 [19.05]	1.328 [33.73]	0.234 [5.94]	-----
2	G42000H000	3.016 [76.61]	2.000 [50.80]	1.750 [44.45]	0.750 [19.05]	1.328 [33.73]	0.234 [5.94]	-----
2	G50000H000	3.422 [86.92]	2.281 [57.94]	2.031 [51.59]	0.750 [19.05]	1.453 [36.91]	0.234 [5.94]	-----
4	G60000H000	3.500 [88.90]	2.375 [60.33]	2.125 [53.98]	1.488 [37.74]	2.000 [50.80]	0.438 [11.13]	3.875 [98.43]
4	G66000H000	2.984 [75.79]	1.969 [50.01]	1.718 [43.64]	1.125 [28.58]	1.688 [42.88]	0.250 [6.35]	3.296 [83.72]
3	G75000H000	3.422 [86.92]	2.281 [57.94]	2.031 [51.59]	1.109 [28.17]	1.797 [45.65]	0.117 [2.98]	-----
4	G104000H000	3.500 [88.90]	2.375 [60.33]	2.125 [53.98]	1.488 [37.74]	2.000 [50.80]	0.438 [11.13]	3.875 [98.43]

MATERIAL: ALUMINUM

FINISH: YELLOW OR BLACK ANODIZE

FOR FLOATING BUSHING OPTION USE CODE “FB” IN STEP 9 OF ORDERING INFORMATION

DIMENSIONS ARE IN INCHES [MILLIMETERS].
ALL DIMENSIONS ARE SUBJECT TO CHANGE.

CABLE ADAPTERS
DIMENSIONS FOR TOP OPENING HOODS (J,Q)

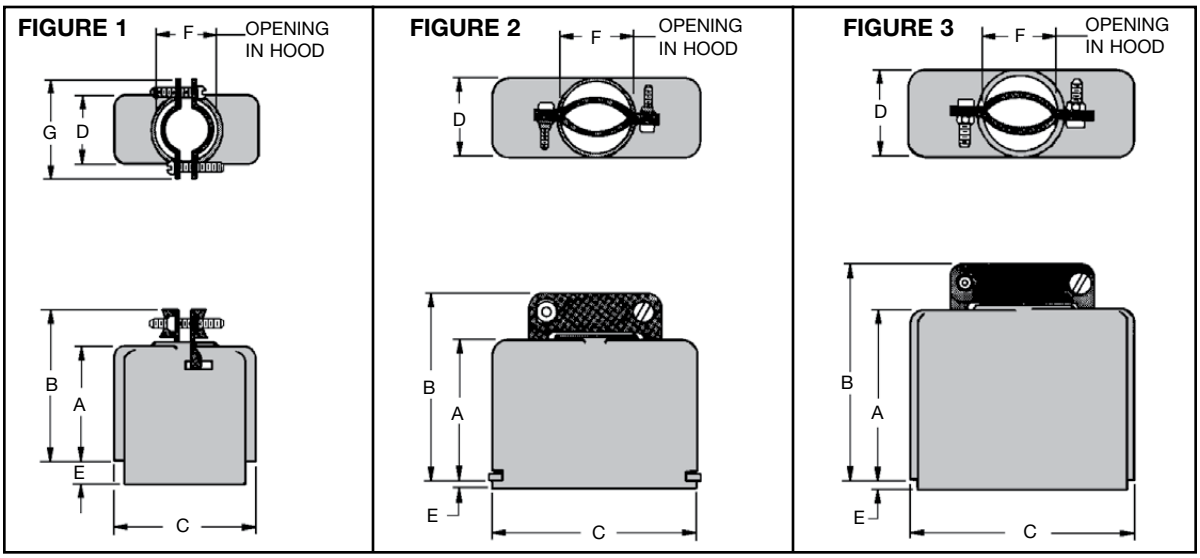

FIGURE	PART NUMBER	A	B	C	D	E	F	G
3	G700000J0	1.140 [28.96]	1.549 [39.34]	1.225 [31.12]	0.437 [11.10]	0.200 [5.08]	0.312 Ø [7.92]	-----
3	G800000J0	1.000 [25.40]	1.304 [33.12]	0.812 [20.62]	0.437 [11.10]	0.281 [7.14]	0.250 Ø [6.35]	-----
1	G900000J0	1.245 [31.62]	1.636 [41.55]	1.357 [34.47]	0.437 [11.10]	0.293 [7.44]	0.375 [9.53] x 0.516 [13.11]	0.812 [20.62]
3	G900000J20	0.855 [21.72]	1.235 [31.38]	1.340 [34.04]	0.437 [11.10]	0.255 [6.48]	0.312 Ø [7.92]	-----
1	G1400000J0	1.200 [30.48]	1.591 [40.41]	1.250 [31.75]	0.500 [12.70]	0.281 [7.14]	0.438 [11.13] x 0.495 [12.57]	0.812 [20.62]
3	G1400000J30	1.188 [30.18]	1.569 [39.86]	1.250 [31.75]	0.500 [12.70]	0.281 [7.14]	0.375 Ø [9.53]	-----
1	G1800000J0	1.188 [30.18]	1.621 [41.17]	1.312 [33.32]	0.624 [15.85]	0.327 [8.31]	0.531 Ø [13.49]	0.938 [23.83]
1	G2000000J0	1.312 [33.32]	1.703 [43.26]	1.580 [40.13]	0.502 [12.80]	0.281 [7.14]	0.442 [11.23] x 0.659 [16.74]	0.812 [20.62]
3	G2100000J0	1.335 [33.91]	1.780 [45.21]	2.290 [58.17]	0.437 [11.10]	0.245 [6.22]	0.375 Ø [9.53]	-----
3	G2600000J0	1.281 [32.54]	1.727 [43.87]	1.625 [41.28]	0.624 [15.85]	0.281 [7.14]	0.375 [9.53] x 0.594 [15.09]	-----
3	G3400000J0	1.250 [31.75]	1.652 [41.96]	2.000 [50.80]	0.834 [21.18]	0.271 [6.88]	0.700 Ø [17.79]	-----
1	G4100000J0	1.250 [31.75]	1.641 [41.68]	2.690 [68.31]	0.507 [12.88]	0.315 [8.00]	0.445 [11.30] x 0.630 [16.00]	0.812 [20.62]
3	G4200000J0	1.300 [33.02]	1.700 [43.18]	2.312 [58.72]	0.830 [21.08]	0.093 [2.36]	0.695 Ø [17.65]	-----
3	G5000000J0	1.834 [46.58]	2.292 [58.22]	2.600 [66.04]	0.812 [20.62]	0.099 [2.51]	0.750 [19.05] x 0.990 [25.15]	-----
3	G5000000J20	1.297 [32.94]	1.708 [43.38]	2.594 [65.89]	0.812 [20.62]	0.093 [2.36]	0.625 Ø [15.88]	-----
3	G5000000J30	1.832 [46.53]	2.292 [58.22]	2.600 [66.04]	0.812 [20.62]	0.139 [3.53]	0.750 Ø [19.05]	-----
3	G5000000J50	1.297 [32.94]	1.745 [44.32]	2.594 [65.89]	0.812 [20.62]	0.093 [2.36]	0.750 [19.05] x 0.990 [25.15]	-----
2	G6000000Q0	2.220 [56.39]	2.740 [69.60]	2.846 [72.29]	1.627 [41.33]	0.092 [2.34]	1.188 Ø [30.18]	-----
2	G6600000Q0	1.140 [28.96]	1.644 [41.76]	2.377 [60.38]	1.221 [31.01]	0.110 [2.79]	0.874 [22.20] x 1.141 [28.98]	-----
3	G7500000J0	2.015 [51.18]	2.530 [64.26]	2.594 [65.89]	1.189 [30.20]	0.085 [2.16]	1.060 Ø [26.92]	-----
2	G10400000Q0	2.220 [56.39]	2.740 [69.60]	2.846 [72.29]	1.627 [41.33]	0.092 [2.34]	1.188 Ø [30.18]	-----

PLASTIC CABLE CLAMPS FOR RIGID CABLE SUPPORT ARE AVAILABLE ON HOODS FOR CONTACT VARIANTS 34, 42 AND 50. SEE PAGE 57.

MATERIAL: HOODS, CABLE CLAMPS AND KNOBS - ALUMINUM, YELLOW OR BLACK ANODIZE

DESKIRTED HOODS AVAILABLE

HOODS HAVE THREADED MOUNTING HOLES FOR USE WITH POLARIZING GUIDES TO ATTACH TO CONNECTOR

DIMENSIONS ARE IN INCHES [MILLIMETERS].
ALL DIMENSIONS ARE SUBJECT TO CHANGE.

CABLE ADAPTERS
DIMENSIONS FOR SIDE OPENING HOODS (L,S)

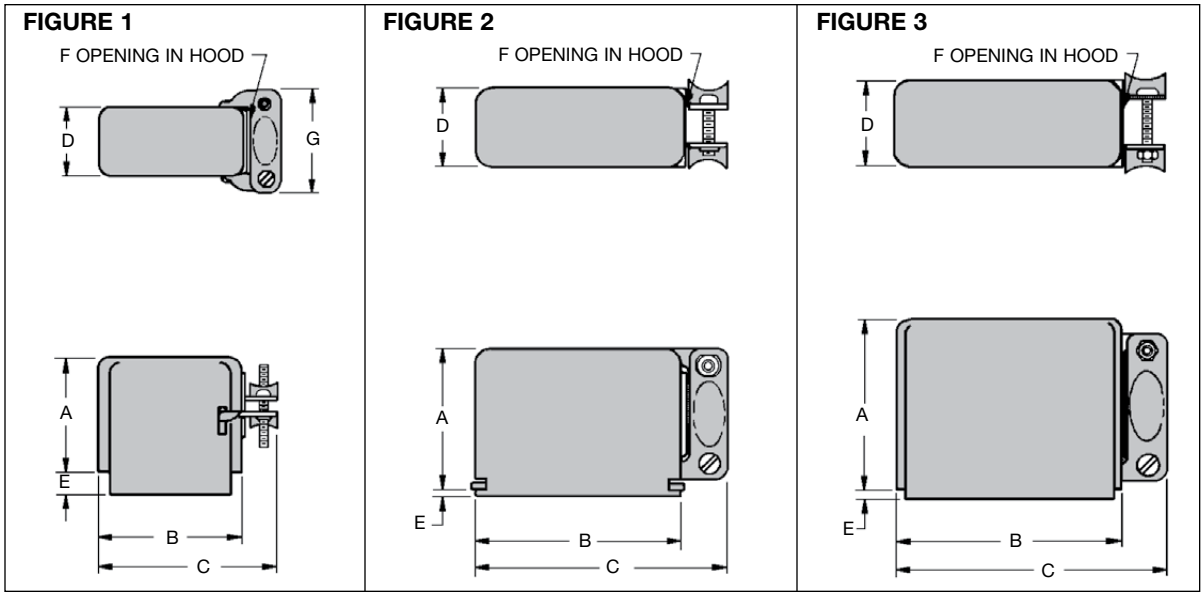

FIGURE	PART NUMBER	A	B	C	D	E	F	G
1	G900000L0	1.240 [31.50]	1.362 [34.59]	1.726 [43.84]	0.437 [11.10]	0.246 [6.25]	0.375 [9.53] x 0.500 [12.70]	0.812 [20.62]
1	G1400000L0	1.187 [30.15]	1.250 [31.75]	1.641 [41.68]	0.500 [12.70]	0.281 [7.14]	0.438 [11.13] x 0.500 [12.70]	0.812 [20.62]
3	G1400000L30	1.188 [30.18]	1.250 [31.75]	1.631 [41.43]	0.500 [12.70]	0.281 [7.14]	0.375 Ø [9.53]	-----
1	G1800000L0	1.188 [30.18]	1.312 [33.32]	1.745 [44.33]	0.624 [15.85]	0.281 [7.14]	0.546 Ø [13.87]	0.938 [23.83]
1	G2000000L0	1.312 [33.32]	1.562 [39.67]	1.953 [49.61]	0.504 [12.80]	0.231 [5.87]	0.442 [11.23] x 0.668 [16.97]	0.812 [20.62]
3	G2100000L0	1.335 [33.91	2.290 [58.17]	2.736 [69.49]	0.437 [11.10]	0.245 [6.22]	0.375 Ø [9.53]	-----
3	G2600000L0	1.281 [32.54]	1.625 [41.28]	2.071 [52.60]	0.624 [15.85]	0.281 [7.14]	0.375 [9.53] x 0.594 [15.09]	-----
3	G3400000L0	1.250 [31.75]	2.000 [50.80]	2.403 [61.04]	0.834 [21.19]	0.271 [6.88]	0.700 Ø [17.78]	-----
1	G4100000L0	1.250 [31.75]	2.690 [68.33]	3.136 [79.65]	0.507 [12.88]	0.315 [8.00]	0.426 [10.82] x 0.615 [15.62]	-----
3	G4200000L0	1.300 [33.02]	2.312 [58.72]	2.712 [68.88]	0.830 [21.08]	0.093 [2.36]	0.695 Ø [17.65]	-----
3	G5000000L0	1.834 [46.58]	2.678 [68.02]	3.124 [79.35]	0.812 [20.62]	0.093 [2.36]	0.750 [19.05] x 0.990 [25.15]	
2	G6600000S0	1.140 [28.96]	2.377 [60.38]	2.947 [74.85]	1.221 [31.01]	0.110 [2.79]	0.845 Ø [21.46]	-----
3	G7500000L0	2.015 [51.18]	2.594 [65.89]	3.109 [78.97]	1.189 [30.20]	0.085 [2.16]	1.060 Ø [26.92]	-----

MATERIAL: HOODS, CABLE CLAMPS AND KNOBS - ALUMINUM, YELLOW OR BLACK ANODIZE
HOODS HAVE THREADED MOUNTING HOLES FOR USE WITH POLARIZING GUIDES TO ATTACH TO CONNECTOR
DESKIRTED HOODS AVAILABLE

DIMENSIONS ARE IN INCHES [MILLIMETERS].
ALL DIMENSIONS ARE SUBJECT TO CHANGE.

CABLE ADAPTERS
DIMENSIONS FOR TOP OPENING HOODS WITH JACKSCREW SYSTEM (J, Y, Z)

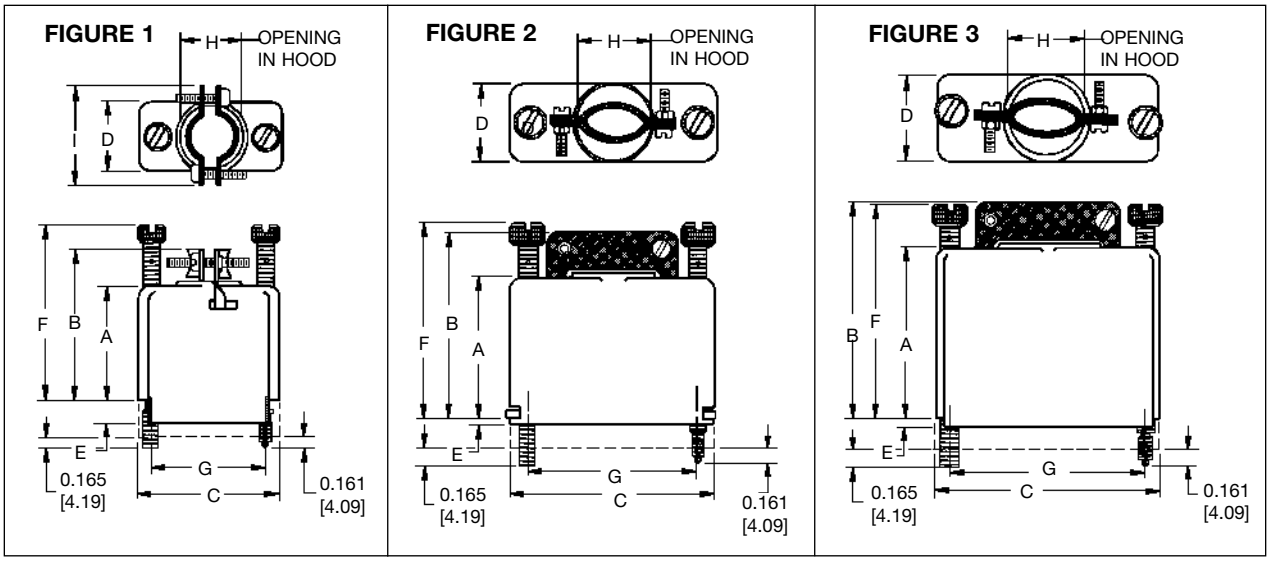

FIGURE	PART NUMBER	A	B	C	D	E	F	G	H	I
1	G900E100J0	1.245 [31.62]	1.636 [41.55]	1.357 [34.47]	0.437 [11.10]	0.293 [7.44]	1.943 [49.35]	1.000 [25.40]	0.375 [9.53] x 0.516 [13.11]	0.812 [20.62]
1	G1400E100J0	1.200 [30.48]	1.591 [40.41]	1.250 [31.75]	0.500 [12.70]	0.281 [7.14]	1.864 [46.89]	0.936 [23.77]	0.438 [11.13] x 0.495 [12.57]	0.812 [20.62]
1	G1800E100J0	1.188 [30.18]	1.621 [41.17]	1.312 [33.32]	0.624 [15.85]	0.327 [8.31]	1.864 [46.89]	1.000 [25.40]	0.531 Ø [13.49]	0.938 [23.83]
1	G2000E100J0	1.312 [33.32]	1.703 [43.26]	1.580 [40.13]	0.502 [12.80]	0.281 [7.14]	1.882 [47.80]	1.250 [31.75]	0.442 [11.23] x 0.659 [16.74]	0.812 [20.62]
3	G2100E100J0	1.335 [33.91]	1.780 [45.21]	2.290 [58.17]	0.437 [11.10]	0.245 [6.22]	1.989 [50.52]	1.936 [49.17]	0.375 Ø [9.53]	-----
3	G2600E100J0	1.281 [32.54]	1.727 [43.87]	1.625 [41.28]	0.624 [15.85]	0.281 [7.14]	1.906 [48.41]	1.312 [33.32]	0.375 [9.53] x 0.594 [15.09]	-----
3	G3400000Y0	1.250 [31.75]	1.652 [41.96]	2.000 [50.80]	0.834 [21.18]	0.271 [6.88]	1.780 [45.21]	1.687 [42.85]	0.700 Ø [17.79]	-----
1	G4100E100J0	1.250 [31.75]	1.641 [41.68]	2.690 [68.31]	0.507 [12.88]	0.315 [8.00]	1.873 [47.57]	2.312 [58.72]	0.445 [11.30] x 0.630 [16.00]	0.812 [20.62]
3	G4200000Y0	1.300 [33.02]	1.700 [43.18]	2.312 [58.72]	0.830 [21.08]	0.093 [2.36]	1.826 [46.38]	2.000 [50.80]	0.695 Ø [17.63]	-----
3	G5000000Y0	1.834 [46.58]	2.292 [58.22]	2.600 [66.04]	0.812 [20.62]	0.099 [2.51]	2.354 [59.79]	2.281 [57.94]	0.750 [19.05] x 0.990 [25.15]	-----
3	G5000000Y20	1.297 [32.94]	1.708 [43.38]	2.594 [65.89]	0.812 [20.62]	0.093 [2.36]	1.827 [46.41]	2.281 [57.94]	0.625 Ø [15.88]	-----
3	G5000000Y30	1.832 [46.53]	2.292 [58.22]	2.600 [66.04]	0.812 [20.62]	0.139 [3.53]	2.354 [59.79]	2.281 [57.94]	0.750 Ø [19.05]	-----
3	G5000000Y50	1.297 [32.94]	1.745 [44.32]	2.594 [65.89]	0.812 [20.62]	0.093 [2.36]	1.826 [46.38]	2.281 [57.94]	0.750 [19.05] x 0.990 [25.15]	-----
2	G6000000Z0	2.220 [56.39]	2.740 [69.60]	2.846 [72.29]	1.627 [41.33]	0.092 [2.34]	2.867 [72.82]	2.375 [60.33]	1.188 Ø [30.18]	-----
2	G6600000Z0	1.140 [28.96]	1.644 [41.76]	2.377 [60.38]	1.221 [31.01]	0.110 [2.79]	1.827 [46.41]	1.969 [50.01]	0.874 [22.20] x 1.141 [28.97]	-----
3	G7500000Y0	2.015 [51.18]	2.530 [64.26]	2.594 [65.89]	1.189 [30.20]	0.085 [2.16]	2.520 [64.01]	2.281 [57.94]	1.060 Ø [26.92]	-----
2	G10400000Z0	2.220 [56.39]	2.740 [69.60]	2.846 [72.29]	1.627 [41.33]	0.092 [2.34]	2.867 [72.82]	2.375 [60.33]	1.188 Ø [30.18]	-----

MATERIAL: HOODS, CABLE CLAMPS AND KNOBS - ALUMINUM, YELLOW OR BLACK ANODIZE
JACKSCREWS - STAINLESS STEEL, PASSIVATED, SEE PAGE 55 FOR THREAD INFORMATION
M 3 x 0.5 METRIC THREADS AVAILABLE ON ZINC PLATED STEEL JACKSCREWS
DESKIRTED HOODS AVAILABLE

*** WHEN SUPPLIED WITH A FEMALE OR MALE SHELL, THE JACKSCREW MATING LENGTHS 0.161 [4.09] SHALL BE 0.121 [3.07] AND THE 0.165 [4.19] SHALL BE 0.125 [3.18]**

DIMENSIONS ARE IN INCHES [MILLIMETERS].
ALL DIMENSIONS ARE SUBJECT TO CHANGE.

CABLE ADAPTERS
DIMENSIONS FOR SIDE OPENING HOODS WITH JACKSCREW SYSTEM (L,I,V)

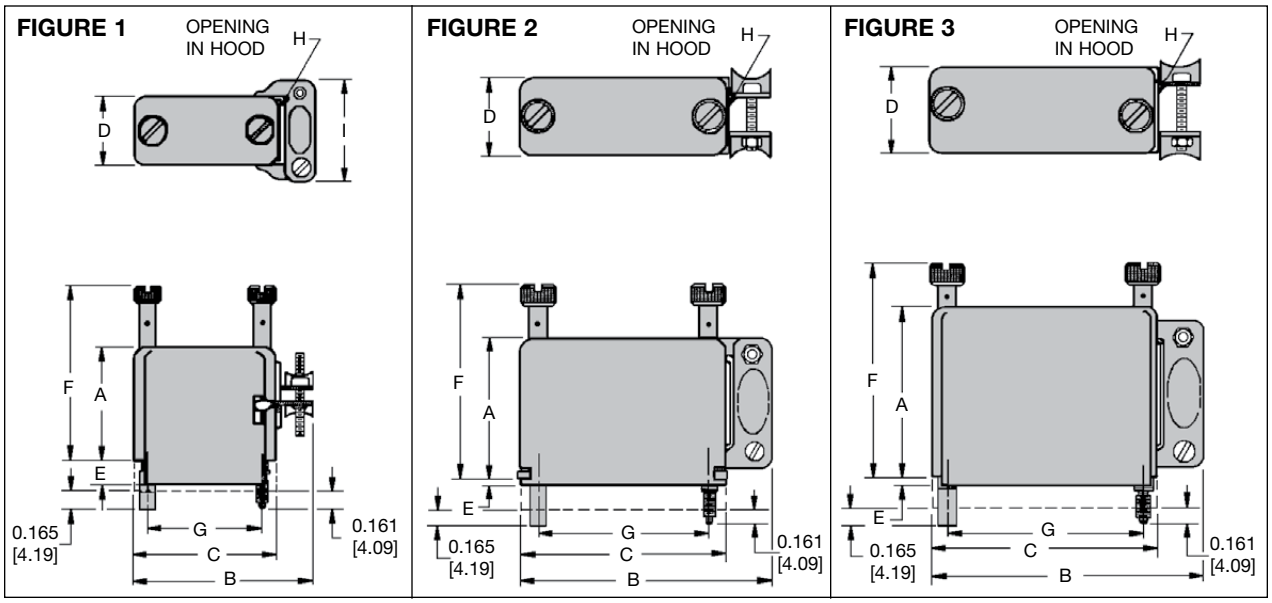

FIGURE	PART NUMBER	A	B	C	D	E	F	G	H	I
1	G900E100L0	1.240 [31.50]	1.726 [43.84]	1.362 [34.59]	0.437 [11.10]	0.246 [6.25]	1.943 [49.35]	1.000 [25.40]	0.375 [9.53] x 0.500 [12.70]	0.812 [20.62]
1	G1400E100L0	1.187 [30.15]	1.641 [41.68]	1.250 [31.75]	0.500 [12.70]	0.281 [7.14]	1.864 [47.35]	0.936 [23.77]	0.438 [11.13] x 0.500 [12.70]	0.812 [20.62]
3	G1400E100L30	1.188 [30.18]	1.631 [41.43]	1.250 [31.75]	0.500 [12.70]	0.281 [7.14]	1.864 [47.35]	0.936 [23.77]	0.375 Ø [9.53]	-----
1	G1800E100L0	1.188 [30.18]	1.745 [44.32]	1.312 [33.32]	0.624 [15.85]	0.281 [7.14]	1.818 [46.18]	1.000 [25.40]	0.546 Ø [13.87]	0.938 [23.83]
1	G2000E100L0	1.312 [33.32]	1.953 [49.61]	1.562 [39.67]	0.504 [12.80]	0.231 [5.87]	1.882 [47.80]	1.250 [31.75]	0.442 [11.23] x 0.668 [16.97]	0.812 [20.62]
3	G2100E100L0	1.335 [33.91]	2.736 [69.49]	2.290 [58.17]	0.437 [11.10]	0.245 [6.22]	1.989 [50.52]	1.936 [49.17]	0.375 Ø [9.53]	-----
3	G2600E100L0	1.281 [32.54]	2.071 [52.60]	1.625 [41.28]	0.624 [15.85]	0.281 [7.14]	1.906 [48.41]	1.312 [33.32]	0.375 [9.53] x 0.594 [15.09]	-----
3	G3400000I0	1.250 [31.75]	2.403 [61.04]	2.000 [50.80]	0.834 [21.19]	0.271 [6.88]	1.780 [45.21]	1.687 [42.85]	0.700 Ø [17.78]	-----
3	G4100E100L0	1.250 [31.75]	3.136 [79.65]	2.690 [68.33]	0.507 [12.88]	0.315 [8.00]	1.873 [47.57]	2.312 [58.72]	0.426 [10.82] x 0.615 [15.62]	-----
3	G4200000I0	1.300 [33.02]	2.712 [68.88]	2.312 [58.72]	0.830 [21.08]	0.093 [2.36]	1.826 [46.38]	2.000 [50.80]	0.695 Ø [17.65]	-----
3	G5000000I0	1.834 [46.58]	3.124 [79.35]	2.678 [68.02]	0.812 [20.62]	0.093 [2.36]	2.354 [59.79]	2.281 [57.94]	0.750 [19.05] x 0.990 [25.15]	-----
2	G6600000V0	1.140 [28.96]	2.947 [74.85]	2.377 [60.38]	1.221 [31.01]	0.110 [2.79]	1.827 [46.41]	1.969 [50.01]	0.845 Ø [21.46]	-----
3	G7500000I0	2.015 [51.18]	3.109 [78.97]	2.594 [65.89]	1.189 [30.20]	0.085 [2.16]	2.520 [64.01]	2.281 [57.94]	1.060 Ø [26.92]	-----

MATERIAL: HOODS, CABLE CLAMPS AND KNOBS - ALUMINUM, YELLOW OR BLACK ANODIZE
JACKSCREWS - STAINLESS STEEL, PASSIVATED, SEE PAGE 55 FOR THREAD INFORMATION
M 3 x 0.5 METRIC THREADS AVAILABLE ON ZINC PLATED STEEL JACKSCREWS
DESKIRTED HOODS AVAILABLE UPON REQUEST

*** WHEN SUPPLIED WITH A FEMALE OR MALE SHELL, THE JACKSCREW MATING LENGTHS 0.161 [4.09] SHALL BE 0.121 [3.07] AND THE 0.165 [4.19] SHALL BE 0.125 [3.18].**

DIMENSIONS ARE IN INCHES [MILLIMETERS].
ALL DIMENSIONS ARE SUBJECT TO CHANGE.

CABLE ADAPTERS

DIMENSIONS FOR SIDE ACCESS HOODS WITH JACKSCREW SYSTEM (Z,V)

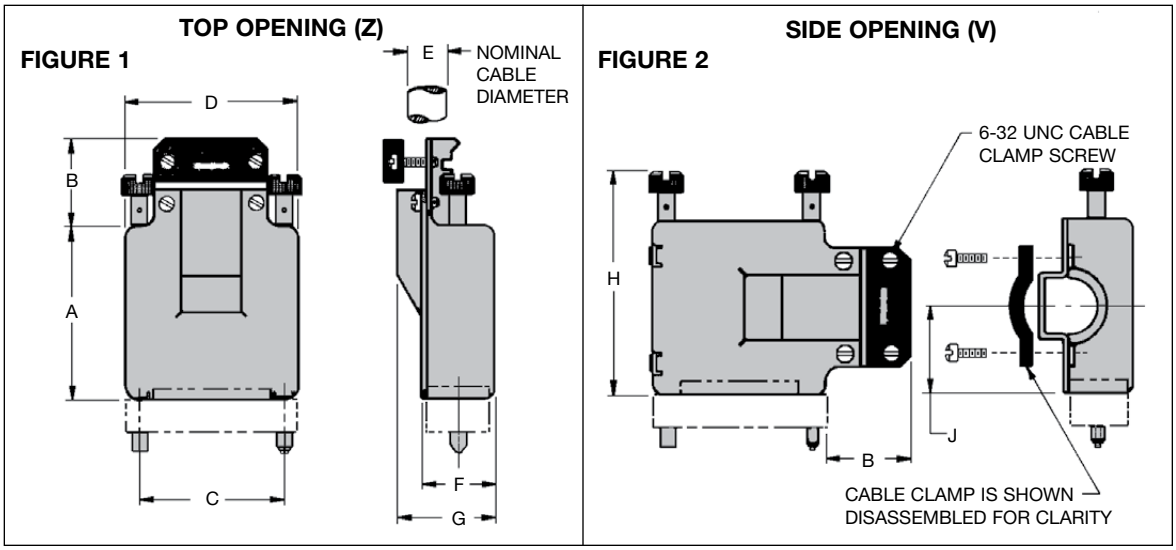

FIGURE	PART NUMBER	A	B	C	D	E	F	G	H	J
1	G3400000Z0	2.100 [53.34]	0.812 [20.62]	1.688 [42.88]	2.100 [53.34]	0.438 [11.13]	0.860 [21.84]	1.110 [28.19]	2.605 [66.17]	-----
2	G3400000V0	2.100 [53.34]	0.812 [20.62]	1.688 [42.88]	2.100 [53.34]	0.438 [11.13]	0.860 [21.84]	1.110 [28.19]	2.605 [66.17]	1.050 [26.67]
1	G5000000Z0	2.693 [68.40]	0.812 [20.62]	2.282 [57.96]	2.693 [68.40]	0.625 [15.88]	0.860 [21.84]	1.235 [31.37]	3.198 [81.23]	-----
2	G5000000V0	2.693 [68.40]	0.812 [20.62]	2.282 [57.96]	2.693 [68.40]	0.625 [15.88]	0.860 [21.84]	1.235 [31.37]	3.198 [81.23]	1.347 [34.21]
1	G7500000Z0	2.693 [68.40]	0.937 [23.80]	2.282 [57.96]	2.693 [68.40]	1.000 [25.40]	1.219 [30.96]	1.720 [43.69]	3.198 [81.23]	-----
2	G7500000V0	2.693 [68.40]	0.937 [23.80]	2.282 [57.96]	2.693 [68.40]	1.000 [25.40]	1.219 [30.96]	1.720 [43.69]	3.245 [82.42]	1.347 [34.21]

MATERIAL: **HOODS AND KNOBS - ALUMINUM, YELLOW OR BLACK ANODIZE**
CABLE CLAMPS - ALUMINUM, YELLOW OR BLACK ANODIZE
JACKSCREW - STAINLESS STEEL, PASSIVATED, 6-32 THREADS STANDARD
M3 x 0.5 METRIC THREADS AVAILABLE

EMI/RFI SHIELDED HOOD

HOOD, CABLE CLAMPS AND KNOBS MATERIAL: ALUMINUM, YELLOW IRIDITE

JACKSCREWS MATERIAL: STAINLESS STEEL

SHIELD ENVELOP MATERIAL: CONDUCTIVE FABRIC TYPICAL SHIELDING EFFECTIVENESS AVERAGES 60 dB IN THE RANGE OF 10 MHz - 1 GHz

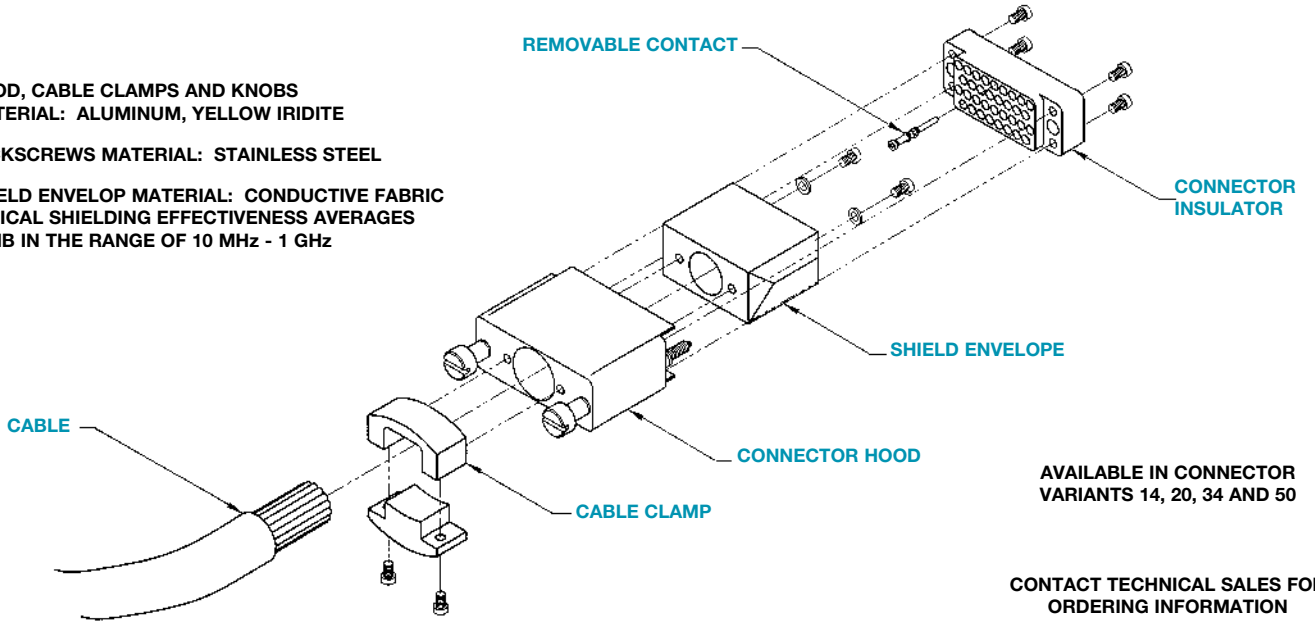

AVAILABLE IN CONNECTOR VARIANTS 14, 20, 34 AND 50

CONTACT TECHNICAL SALES FOR ORDERING INFORMATION

TOP OPENING HOODS WITH JACKSCREW SYSTEM AND PLASTIC CABLE CLAMPS

FOR RIGID CABLE SUPPORT

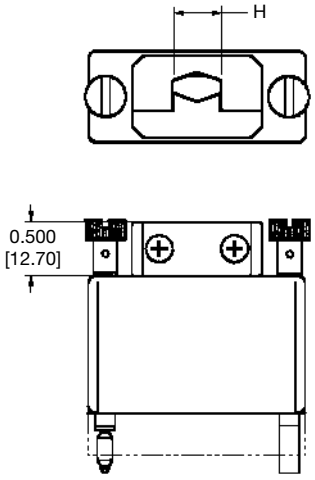

HOOD PART NUMBER	H
G3400000Y60	0.300 MAX. [7.62] Ø
G3400000Y70	0.375 MAX. [9.53] Ø
G3400000Y80	0.450 MAX. [11.43] Ø
G4200000Y60	0.300 MAX. [7.62] Ø
G4200000Y70	0.375 MAX. [9.53] Ø
G4200000Y80	0.450 MAX. [11.43] Ø
G5000000Y60	0.300 MAX. [7.62] Ø
G5000000Y70	0.375 MAX. [9.53] Ø
G5000000Y80	0.450 MAX. [11.43] Ø

CABLE CLAMPS MATERIAL - COMPOSITE STANDARD,
GLASS FILLED POLYESTER OPTION

ALUMINUM MATERIAL WITH YELLOW OR BLACK ANODIZE FINISH ALSO AVAILABLE FOR CABLE CLAMPS

**DIMENSIONS ARE IN INCHES [MILLIMETERS].
ALL DIMENSIONS ARE SUBJECT TO CHANGE.**

EMI/RFI SHIELDED CABLE ADAPTER (HOOD) AND SHELLS (Z2, R2, P2) FOR USE WITH SIZE 34 CONNECTOR VARIANTS

DEEP DRAWN STEEL CONSTRUCTION

SHIELDED TOP OPENING HOOD (Z2)

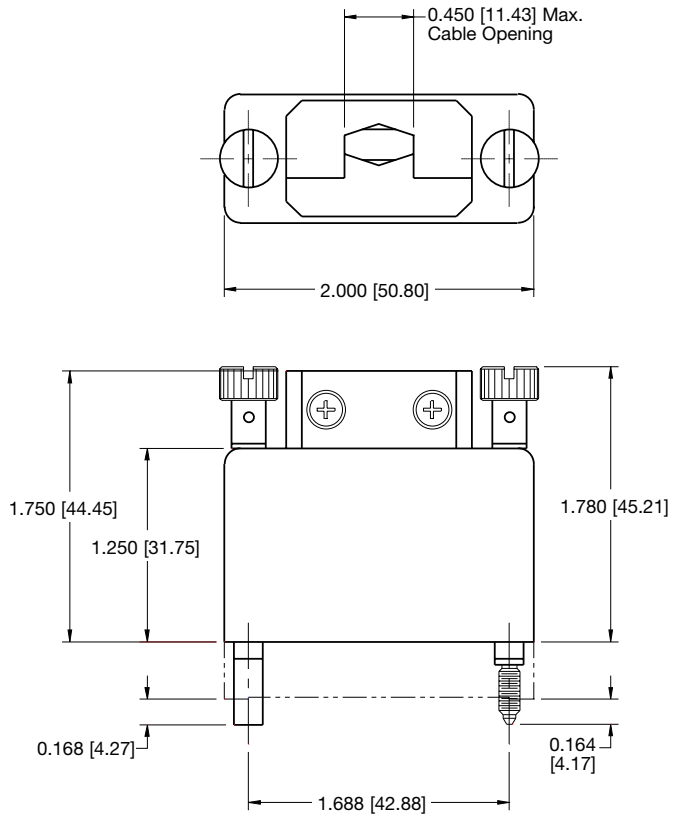

Materials and Finishes:

Hood: Steel, nickel plate, or tin plate.
Cable Clamp: Plastic, nickel plate.
Jackscrews: Stainless steel, passivated.
Knobs: Aluminum, anodized.

SHIELDED FEMALE SHELL (R2)

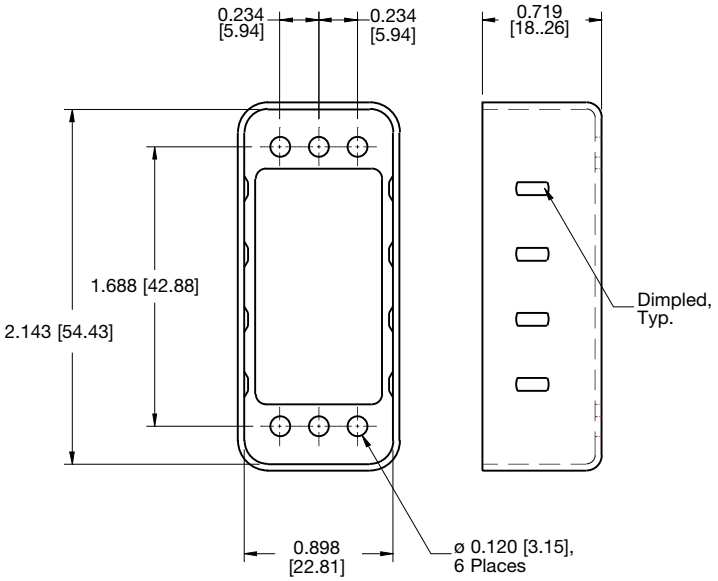

Materials and Finishes:

Steel, nickel plate, or tin plate.
Aluminum, chemical conversion coating.

SHIELDED MALE SHELL (P2)

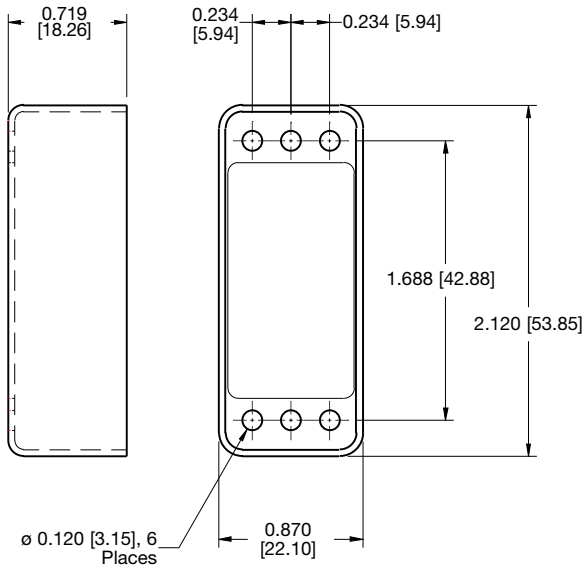

DIMENSIONS ARE IN INCHES [MILLIMETERS].
ALL DIMENSIONS ARE SUBJECT TO CHANGE.

PANEL CUT-OUT DIMENSIONS
FOR GM SERIES AND GMCT SERIES CONNECTORS

FIGURE 1

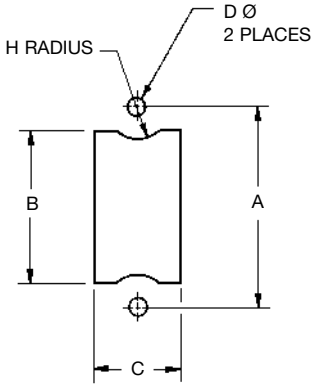

FIGURE 2

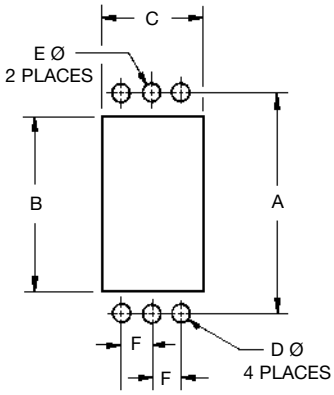

FIGURE 3

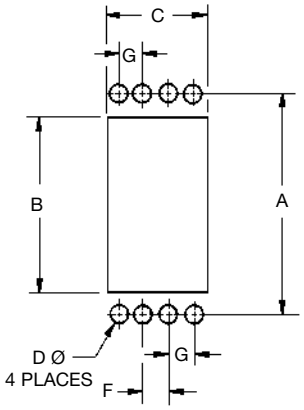

SIZE	FIGURE	A	B MIN.	C MIN.	D MIN.	E MIN.	F	G	H MAX.
7	1	0.906 [23.01]	0.660 [16.76]	0.386 [9.80]	0.120 [3.05]	------	------	------	------
8	1	0.562 [14.27]	0.440 [11.18]	0.385 [9.78]	0.095 [2.41]	------	------	------	------
9	1	1.000 [25.40]	0.820 [20.83]	0.386 [9.80]	0.120 [3.05]	------	------	------	------
14	1	0.936 [23.77]	0.817 [20.75]	0.446 [11.33]	0.120 [3.05]	------	------	------	0.118 [3.00]
18	1	1.000 [25.40]	0.880 [22.35]	0.572 [14.53]	0.120 [3.05]	------	------	------	0.115 [2.92]
20	1	1.250 [31.75]	1.129 [28.68]	0.446 [11.33]	0.120 [3.05]	------	------	------	0.115 [2.92]
21	1	1.936 [49.17]	1.830 [46.48]	0.384 [9.75]	0.120 [3.05]	------	------	------	0.115 [2.92]
26	1	1.312 [33.32]	1.192 [30.28]	0.572 [14.53]	0.120 [3.05]	------	------	------	------
34	2	1.687 [42.85]	1.389 [35.28]	0.776 [19.71]	0.120 [3.05]	0.125 [3.18]	0.234 [5.94]	------	------
41	1	2.312 [58.72]	2.135 [54.23]	0.446 [11.33]	0.120 [3.05]	------	------	------	------
42	2	2.000 [50.80]	1.682 [42.72]	0.776 [19.71]	0.120 [3.05]	0.125 [3.18]	0.234 [5.94]	------	------
50	2	2.282 [57.96]	1.983 [50.37]	0.776 [19.71]	0.120 [3.05]	0.125 [3.18]	0.234 [5.94]	------	------
60	2	2.375 [60.33]	2.058 [52.27]	1.479 [37.57]	0.120 [3.05]	0.145 [3.68]	0.438 [11.13]	------	------
66	2	1.968 [49.99]	1.683 [42.75]	1.135 [28.83]	0.120 [3.05]	0.125 [3.18]	0.251 [6.38]	------	------
75	3	2.282 [57.96]	1.987 [50.47]	1.120 [28.45]	0.120 [3.05]	------	0.234 [5.94]	0.266 [6.76]	------
104	2	2.375 [60.33]	2.058 [52.27]	1.479 [37.57]	0.120 [3.05]	0.145 [3.68]	0.438 [11.13]	------	------

DIMENSIONS ARE IN INCHES [MILLIMETERS].
ALL DIMENSIONS ARE SUBJECT TO CHANGE.

GROUNDING PLATES DESIGNED FOR AIRCRAFT APPLICATIONS

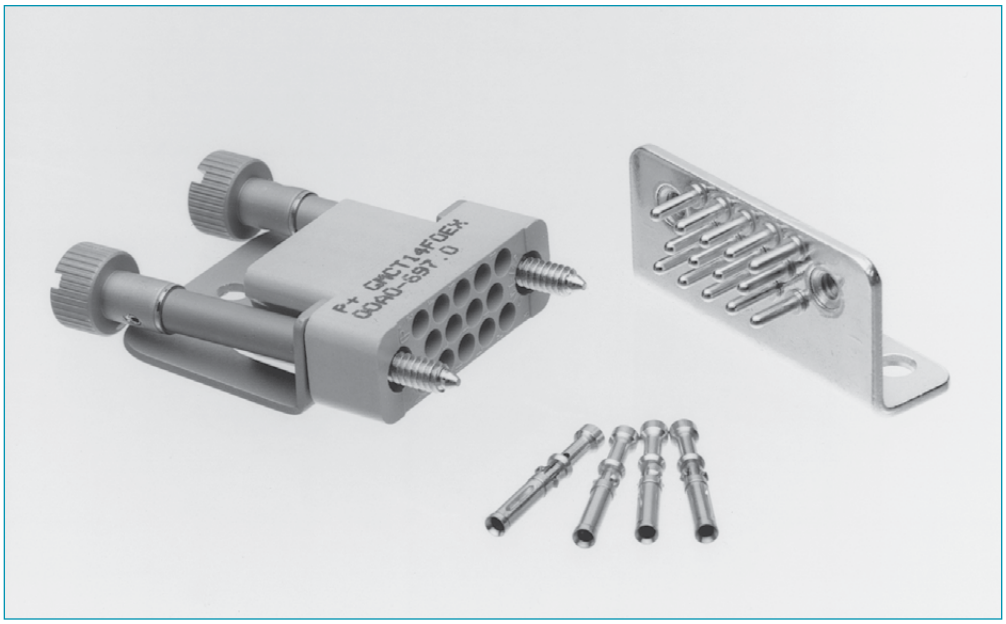

Positronic Industries' grounding plates were designed especially for aircraft applications where shielded cable must be grounded to the aircraft frame. The ground wires of the shielded cable are piggy-backed out of the cable with ferrules and are crimped to Size 16 female contacts. The female contacts are loaded into standard 14 or 34 contact connector housings. These connectors can then be mated to the grounding plate which is fastened to the aircraft frame.

Grounding plates have Size 16 precision-machined male contacts which are swaged and soldered onto the metal plate. The metal plates (angled and plane) have fixed female jackscrews that accept the rotating jackscrews, which are an integral part of the mating female connector. Long rotating jackscrews extend beyond the edge of the cable adapter of the 14-contact female connector which permits easy coupling to the grounding plate.

Other contact variants are available for grounding plate applications. Contact Technical Sales for information on the availability of other grounding plates offered by Positronic Industries.

GROUNDING PLATES TECHNICAL CHARACTERISTICS

MATERIALS AND FINISHES:

Insulator:	Glass-filled DAP per MIL-M-14, Type SDG-F. Grey or black in color.
Grounding Plates:	Copper alloy with tin plate.
Contacts:	Copper alloy with 0.000010 inch [0.25 microns] gold over nickel plate.
Jackscrew System:	Stainless steel, passivated.
Strain Reliefs:	Steel with zinc plate and chromate seal or aluminum with yellow anodize.

MECHANICAL CHARACTERISTICS:

Removable Female Contacts:	Insert contact to rear face of insulator, release from front face of insulator. "Closed Entry" design for highest reliability.
Contact Retention in Insulator:	20 lbs. (89N) after 10 cycles of contact insertion/extraction.
Female Contact Termination:	Crimp wires, Sizes 20 AWG [0.5 mm^2] through 24 AWG [0.25 mm^2].
Jackscrews:	6-32 UNC threads.

ELECTRICAL CHARACTERISTICS:

Contact Current Rating:	13 amperes nominal.
Insulation Resistance:	5 G ohms.
Working Voltage:	500 VAC (rms).
Working Temperature:	-65°C to 150°C.

GROUNDING PLATE COMPONENT DESCRIPTION

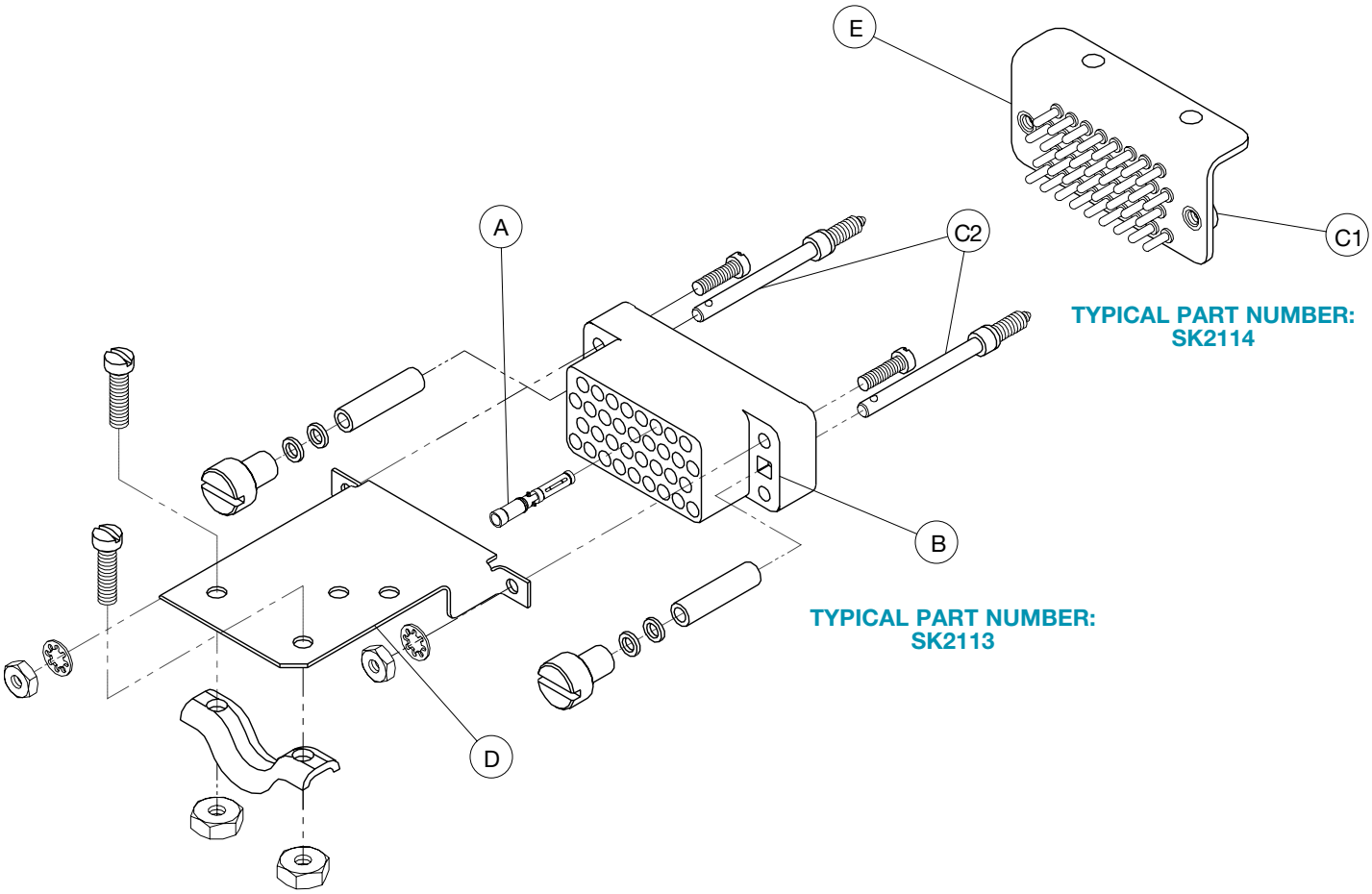

CONNECTOR COMPONENT DESCRIPTIONS	
ITEM	**COMPONENT DESCRIPTIONS**
A	Female Contacts, Size 16, Crimp Terminations.
B	Female Connector Insulator.
C1	Fixed Jackscrew.
C2	Rotating Jackscrew.
D	Strain Relief provides cable support.
E	Grounding Plate.

DIMENSIONS ARE IN INCHES [MILLIMETERS].
ALL DIMENSIONS ARE SUBJECT TO CHANGE.

Grounding Plate Ordering Information

Grounding plates are offered in five (5) different configurations, as shown below. These grounding plates can be used with the connector strain relief assemblies shown to the right below. The connector strain relief assemblies are provided with an appropriate number of FC120N2 female contacts. The FC120N2 contacts feature a "Closed Entry" design and accomodate wire sizes 20 - 24 AWG (0.5 - 0.25 mm²). Reference the schematics below for dimensional information. Use the indicated part numbers below to order your grounding plate assemblies from Positronic Industries.

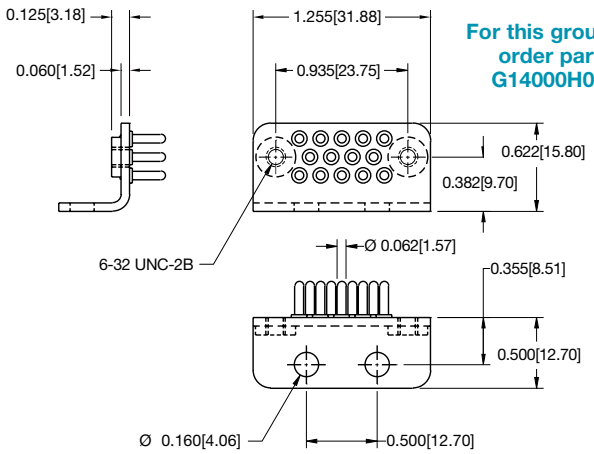

For this grounding plate, order part number: G14000H000-1265.0

For this grounding plate, order part number: SK2484

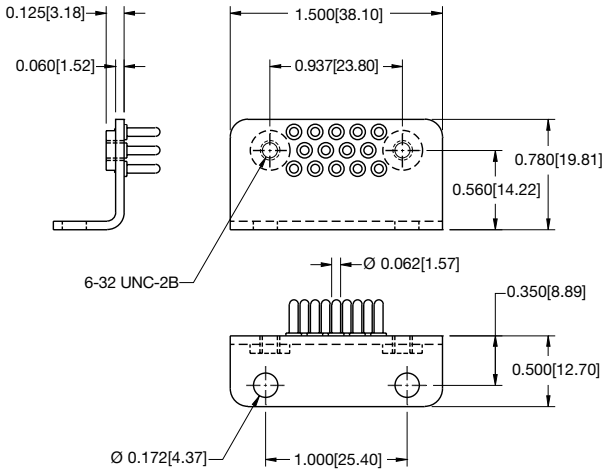

For this grounding plate, order part number: SK2665

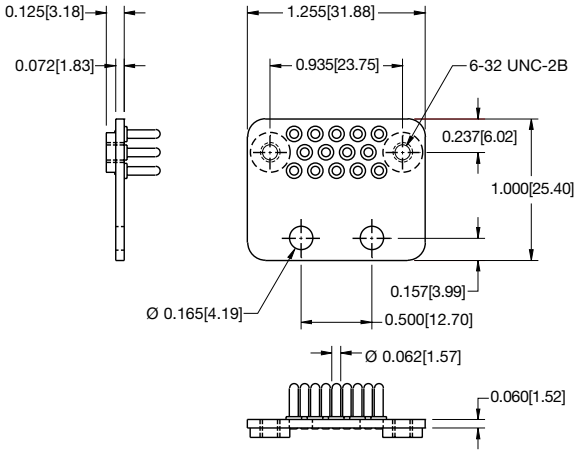

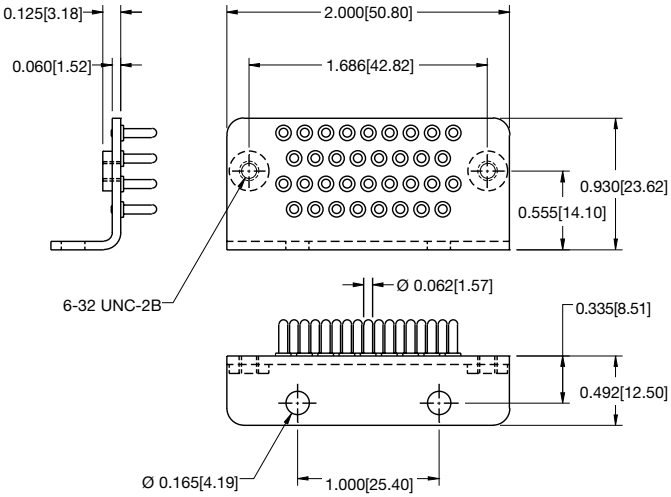

For this grounding plate, order part number: SK2114

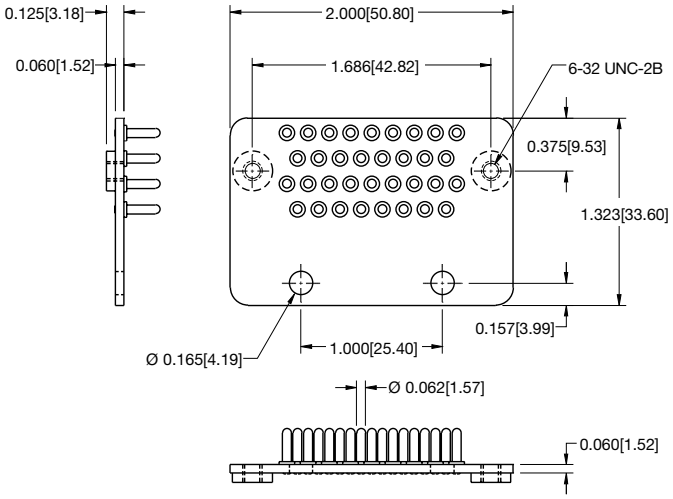

For this grounding plate, order part number: SK2664

GROUNDING PLATES DESIGNED FOR AIRCRAFT APPLICATIONS

For this connector strain relief assembly, order part number: GMCT14F0EX00A0-697.0

A plastic cable tie is supplied with this connector.

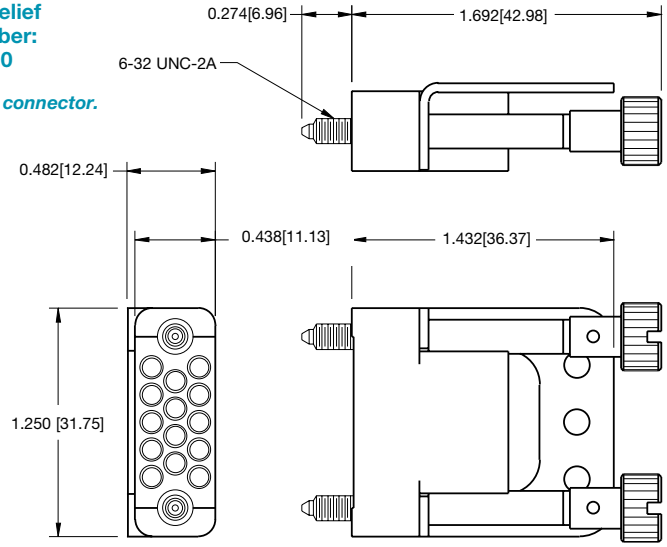

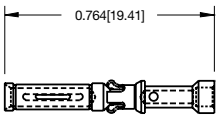

FC120N2 FEMALE CONTACT "CLOSED ENTRY" DESIGN

(ENLARGED)

The appropriate number of contacts are supplied with the connectors. These crimp termination contacts accomodate wire sizes 20 - 24 AWG (0.5 - 0.25 mm²). Contact Technical Sales for crimp tool ordering information.

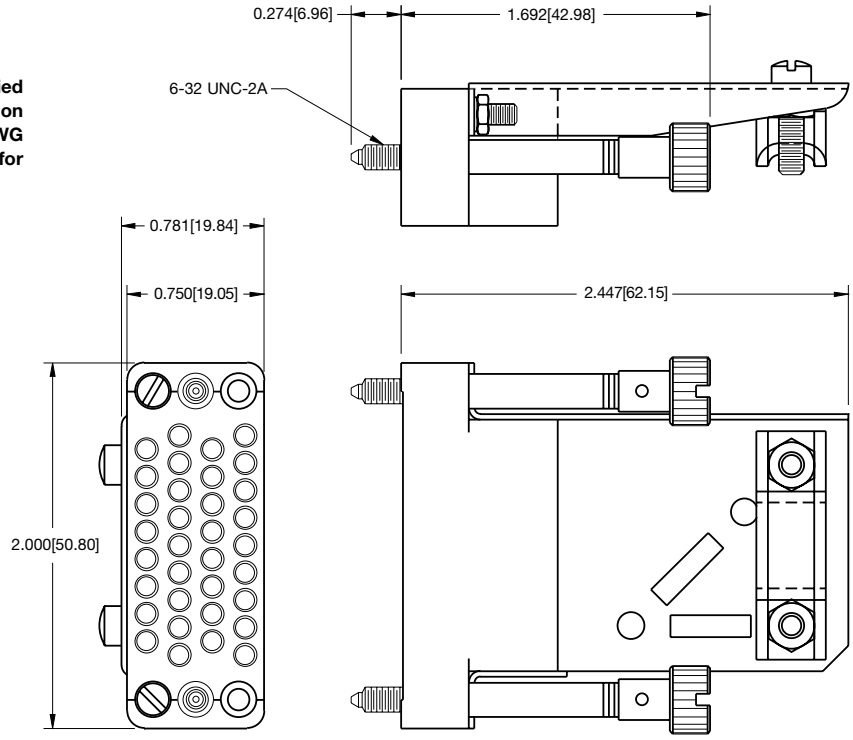

For this connector strain relief assembly, order part number: SK2113

**DIMENSIONS ARE IN INCHES [MILLIMETERS].
ALL DIMENSIONS ARE SUBJECT TO CHANGE.**

ORDERING INFORMATION FOR MIL-DTL-28748/3, MIL-DTL-28748/4, MIL-DTL-28748/5 AND MIL-DTL-28748/6

CHART #1 MALE CONNECTORS

PART NUMBER EXPLANATIONS

M28748/3-	B	1	A	S	1A

Step 1 – Basic Part Number
M28748/3-

Step 2 – Insert Size
B - 9 Contact Variant
C - 14 Contact Variant
D - 20 Contact Variant
E - 26 Contact Variant
F - 34 Contact Variant
G - 42 Contact Variant
H - 50 Contact Variant
J - 66 Contact Variant
K - 75 Contact Variant
L - 104 Contact Variant

Step 3 – Shield/Retaining Plate

Shield
1 - Top Opening Hood (Size 9-50 & 75)
2 - Side Opening Hood (Size 9-50 & 75)
3 - Top Opening Hood (Size 66/104)
4 - Side Opening Hood (Size 66/104)
0 - None

Retaining Plate
5 - Retaining Plate (Size 9-26)
6 - Retaining Plate (Size 34-75, except Size 66)
7 - Retaining Plate (Size 66/104)

Step 4– Shell
A - A (Polarized Plug)
B - B (Polarized Plug)
C - C (Polarized Plug)
D - D (Polarized Plug)
E - E (Polarized Plug)
F - F (Polarized Plug)
G - G (Polarized Plug)
H - Unpolarized Plug
J - A (Polarized Receptacle)
K - B (Polarized Receptacle)
L - C (Polarized Receptacle)
M - D (Polarized Receptacle)
N - E (Polarized Receptacle)
P - F (Polarized Receptacle)
Q - G (Polarized Receptacle)
R - Unpolarized Receptacle
0 - None

Step 5 – Jackscrews/Guide Pins
L - Long Jackscrews/Shields Only
S - Short Jackscrews/No Shield
F - Fixed Jackscrews/No Shield
G - Guide Pin/No Shield
0 - None Included

Step 6 – Contacts
(SEE CHART 5)

CHART #2 FEMALE CONNECTORS

PART NUMBER EXPLANATIONS

M28748/4-	C	1	A	L	1A

Step 1 – Basic Part Number
M28748/4

Step 2 – Insert Size
B - 9 Contact Variant
C - 14 Contact Variant
D - 20 Contact Variant
E - 26 Contact Variant
F - 34 Contact Variant
G - 42 Contact Variant
H - 50 Contact Variant
J - 66 Contact Variant
K - 75 Contact Variant
L - 104 Contact Variant

Step 3 – Shield/Retaining Plate
1 - Retaining Plate (Size 9-26)
2 - Retaining Plate (Size 34-75, except Size 66)
3 - Retaining Plate (Size 66/104)
4 - Top Opening Hood (Size 9-50 & 75)
5 - Side Opening Hood (Size 9-50 & 75)
6 - Top Opening Hood (Size 66/104)
7 - Side Opening Hood (Size 66/104)
0 - None

Step 4– Shell
A - A (Polarized Receptacle)
B - B (Polarized Receptacle)
C - C (Polarized Receptacle)
D - D (Polarized Receptacle)
E - E (Polarized Receptacle)
F - F (Polarized Receptacle)
G - G (Polarized Receptacle)
H - Unpolarized Receptacle
J - A (Polarized Plug)
K - B (Polarized Plug)
L - C (Polarized Plug)
M - D (Polarized Plug)
N - E (Polarized Plug)
P - F (Polarized Plug)
Q - G (Polarized Plug)
R - Unpolarized Plug
0 - None

Step 5 – Jackscrews/Guide Pins
L - Long Jackscrews/Shields Only
S - Short Jackscrew/No Shield
F - Fixed Jackscrew/No Shield
G - Guide Pin/No Shield
0 - None

Step 6 – Contacts
(SEE CHART 6)

See GMCT Series Connectors pages 1-21 and Accessories pages 44-58

CHART #3 MALE CONNECTORS

PART NUMBER EXPLANATIONS

M28748/5-	B	1	A	L	1A

Step 1 – Basic Part Number
M28748/5-

Step 2 – Insert Size
A - 7 Contact Variant
B - 9 Contact Variant
C - 14 Contact Variant
D - 20 Contact Variant
E - 26 Contact Variant
F - 34 Contact Variant
H - 50 Contact Variant

Step 3 – Shield/Retaining Plate

Shield
1 - Top Opening, use w/o shell (Size 9-26)
2 - Side Opening, use w/o shell (Size 9-26)
3 - Top Opening, use w/o shell (Size 34-50)
4 - Side Opening, use w/o shell (Size 34-50)
5 - Top Opening, use with Shell (Size 34-50)
6 - Side Opening, use with Shell (Size 34-75, except Size 66)

Retaining Plate
7 - Retaining Plate (Size 9-26)
8 - Retaining Plate (Size 34-50)

Step 4– Shell
A - A (Polarized Plug)
B - B (Polarized Plug)
C - C (Polarized Plug)
D - D (Polarized Plug)
E - E [Polarized Plug)
F - F (Polarized Plug)
G - G (Polarized Plug)
H - Unpolarized Plug
J - A (Polarized Receptacle)
K - B (Polarized Receptacle)
L - C (Polarized Receptacle)
M - D (Polarized Receptacle)
N - E (Polarized Receptacle)
P - F (Polarized Receptacle)
Q - G (Polarized Receptacle)
R - Unpolarized Receptacle
0 - None

Step 5 – Jackscrews/ Guide Pins
L - Long Jackscrews (Shields Only)
S - Short Jackscrews (No Shield)
F - Fixed Jackscrews (No Shield)
G - Guide Pins (No Shield)
0 - None

Step 6 – Contacts
1A - Size 20 Contacts

CHART #4 FEMALE CONNECTORS

PART NUMBER EXPLANATIONS

M28748/6-	B	1	A	L	1A

Step 1 – Basic Part Number
M28748/6-

Step 2 – Insert Size
A - 7 Contact Variant
B - 9 Contact Variant
C - 14 Contact Variant
D - 20 Contact Variant
E - 26 Contact Variant
F - 34 Contact Variant
H - 50 Contact Variant

Step 3 – Shield/Retaining Plate

Shield
1 - Top Opening, use w/o shell (Size 9-26)
2 - Side Opening, use w/o shell (Size 9-26)
3 - Top Opening, use w/o shell (Size 34-50)
4 - Side Opening, use w/o shell (Size 34-50)
5 - Top Opening, use with Shell (Size 34-50)
6 - Side Opening, use with Shell (Size 34-50)

Retaining Plate
7 - Retaining Plate (Size 9-26)
8 - Retaining Plate (Size 34-50)

Step 4– Shell
A - A (Polarized Plug)
B - B (Polarized Plug)
C - C (Polarized Plug)
D - D (Polarized Plug)
E - E [Polarized Plug)
F - F (Polarized Plug)
G - G (Polarized Plug)
H - Unpolarized Plug
J - A (Polarized Receptacle)
K - B (Polarized Receptacle)
L - C (Polarized Receptacle)
M - D (Polarized Receptacle)
N - E (Polarized Receptacle)
P - F (Polarized Receptacle)
Q - G (Polarized Receptacle)
R - Unpolarized Receptacle
0 - None

Step 5 – Jackscrews/Guide Pins
L - Long Jackscrews (Shields Only)
S - Short Jackscrews (No Shield)
F - Fixed Jackscrews (No Shield)
G - Guide Pins (No Shield)
0 - None

Step 6 – Contacts
1A - Size 20 Contacts

See GM Series Connectors pages 45-50 and Accessories pages 51-66

DIMENSIONS ARE IN INCHES [MILLIMETERS].
ALL DIMENSIONS ARE SUBJECT TO CHANGE.

ORDERING INFORMATION FOR MIL-DTL-28748/3 AND MIL-DTL-28748/4

CHART #5

CONTACT SIZE PERCENT (FOR M28748/3 CONNECTORS)			
CONTACT	SIZE 16-16 M39029/34-273	SIZE 16-20 M39029/34-272	SIZE 20-20 M39029/34-271
1A	100	0	0
1B	90	0	0
1C	80	0	0
1D	70	0	0
1E	60	0	0
1F	50	0	0
1G	40	0	0
1H	30	0	0
1J	20	0	0
1K	10	0	0
1L	0	0	0
2A	0	100	0
2B	0	90	0
2C	0	80	0
2D	0	70	0
2E	0	60	0
2F	0	50	0
2G	0	40	0
2H	0	30	0
2J	0	20	0
2K	0	10	0
3A	0	0	100
3B	0	0	90
3C	0	0	80
3D	0	0	70
3E	0	0	60
3F	0	0	50
3G	0	0	40
3H	0	0	30
3J	0	0	20
3K	0	0	10

CHART #6

CONTACT SIZE PERCENT (FOR M28748/4 CONNECTORS)			
CONTACT	SIZE 16-16 M39029/35-276	SIZE 16-20 M39029/35-275	SIZE 20-20 M39029/35-274
1A	100	0	0
1B	90	0	0
1C	80	0	0
1D	70	0	0
1E	60	0	0
1F	50	0	0
1G	40	0	0
1H	30	0	0
1J	20	0	0
1K	10	0	0
1L	0	0	0
2A	0	100	0
2B	0	90	0
2C	0	80	0
2D	0	70	0
2E	0	60	0
2F	0	50	0
2G	0	40	0
2H	0	30	0
2J	0	20	0
2K	0	10	0
3A	0	0	100
3B	0	0	90
3C	0	0	80
3D	0	0	70
3E	0	0	60
3F	0	0	50
3G	0	0	40
3H	0	0	30
3J	0	0	20
3K	0	0	10

See GMCT Series contacts page 12.

DIMENSIONS ARE IN INCHES [MILLIMETERS].
ALL DIMENSIONS ARE SUBJECT TO CHANGE.

MIL-DTL-28748 & SAE AS 39029 QUALIFIED PRODUCTS LISTING

Positronic Industries offers the listing below of connectors and connector accessories, which are products qualified under Military Specifications MIL-DTL-28748 and SAE AS 39029. For additional Q.P.L. connectors, please contact Technical Sales.
Positronic GMCT series connectors are Q.P.L. approved to MIL-DTL-28748.
Positronic GMCT series crimp removable contacts are Q.P.L. approved to SAE AS 39029.
Positronic GM series connectors are Q.P.L. approved to MIL-DTL-28748.

MILITARY PART NUMBER	MILITARY PART NUMBER	MILITARY PART NUMBER	MILITARY PART NUMBER	MILITARY PART NUMBER
M28748/3-BXXL*	M28748/3-HXXG*	M28748/4-EXXS*	M28748/4-LXX0*	M28748/6-B00S1A
M28748/3-BXXS*	M28748/3-HXX0*	M28748/4-EXXF*	M28748/5-A00S1A	M28748/6-B00F1A
M28748/3-BXXF*	M28748/3-JXXL*	M28748/4-EXXG*	M28748/5-A00F1A	M28748/6-B00G1A
M28748/3-BXXG*	M28748/3-JXXS*	M28748/4-EXX0*	M28748/5-A00G1A	M28748/6-B0001A
M28748/3-BXX0*	M28748/3-JXXF*	M28748/4-FXXL*	M28748/5-A0001A	M28748/6-C00S1A
M28748/3-CXXL*	M28748/3-JXXG*	M28748/4-FXXS*	M28748/5-B00S1A	M28748/6-C00F1A
M28748/3-CXXS*	M28748/3-JXX0*	M28748/4-FXXF*	M28748/5-B00F1A	M28748/6-C00G1A
M28748/3-CXXF*	M28748/3-KXXL*	M28748/4-FXXG*	M28748/5-B00G1A	M28748/6-C0001A
M28748/3-CXXG*	M28748/3-KXXS*	M28748/4-FXX0*	M28748/5-B0001A	M28748/6-D00S1A
M28748/3-CXX0*	M28748/3-KXXF*	M28748/4-GXXL*	M28748/5-C00S1A	M28748/6-D00F1A
M28748/3-DXXL*	M28748/3-KXXG*	M28748/4-GXXS*	M28748/5-C00F1A	M28748/6-D00G1A
M28748/3-DXXS*	M28748/3-KXX0*	M28748/4-GXXF*	M28748/5-C00G1A	M28748/6-D0001A
M28748/3-DXXF*	M28748/3-LXXL*	M28748/4-GXXG*	M28748/5-C0001A	M28748/6-E00S1A
M28748/3-DXXG*	M28748/3-LXXS*	M28748/4-GXX0*	M28748/5-D00S1A	M28748/6-E00F1A
M28748/3-DXX0*	M28748/3-LXXF*	M28748/4-HXXL*	M28748/5-D00F1A	M28748/6-E00G1A
M28748/3-EXXL*	M28748/3-LXXG*	M28748/4-HXXS*	M28748/5-D00G1A	M28748/6-E0001A
M28748/3-EXXS*	M28748/3-LXX0*	M28748/4-HXXF*	M28748/5-D0001A	M28748/6-F00S1A
M28748/3-EXXF*	M28748/4-BXXL*	M28748/4-HXXG*	M28748/5-E00S1A	M28748/6-F00F1A
M28748/3-EXXG*	M28748/4-BXXS*	M28748/4-HXX0*	M28748/5-E00F1A	M28748/6-F00G1A
M28748/3-EXX0*	M28748/4-BXXF*	M28748/4-JXXL*	M28748/5-E00G1A	M28748/6-F0001A
M28748/3-FXXL*	M28748/4-BXXG*	M28748/4-JXXS*	M28748/5-E0001A	M28748/6-H00S1A
M28748/3-FXXS*	M28748/4-BXX0*	M28748/4-JXXF*	M28748/5-F00S1A	M28748/6-H00F1A
M28748/3-FXXF*	M28748/4-CXXL*	M28748/4-JXXG*	M28748/5-F00F1A	M28748/6-H00G1A
M28748/3-FXXG*	M28748/4-CXXS*	M28748/4-JXX0*	M28748/5-F00G1A	M28748/6H0001A
M28748/3-FXX0*	M28748/4-CXXF*	M28748/4-KXXL*	M28748/5-F0001A	M39029/34-271
M28748/3-GXXL*	M28748/4-CXXG*	M28748/4-KXXS*	M28748/5-H00S1A	M39029/34-272
M28748/3-GXXS*	M28748/4-CXX0*	M28748/4-KXXF*	M28748/5-H00F1A	M39029/34-273
M28748/3-GXXF*	M28748/4-DXXL*	M28748/4-KXXG*	M28748/5-H00G1A	M39029/35-274
M28748/3-GXXG*	M28748/4-DXXS*	M28748/4-KXX0*	M28748/5-H0001A	M39029/35-275
M28748/3-GXX0*	M28748/4-DXXF*	M28748/4-LXXL*	M28748/6-A00S1A	M39029/35-276
M28748/3-HXXL*	M28748/4-DXXG*	M28748/4-LXXS*	M28748/6-A00F1A	
M28748/3-HXXS*	M28748/4-DXX0*	M28748/4-LXXF*	M28748/6-A00G1A	
M28748/3-HXXF*	M28748/4-EXXL*	M28748/4-LXXG*	M28748/6-A0001A	

XX Refer to charts #1 or #2 as applicable
* Refer to charts #5 or #6 as applicable

Positronic®

an **Amphenol** company

Regional Headquarters

Positronic | Americas
1325 N Eldon Ave
Springfield MO 65803 USA

+1 800 641 4054
info@connectpositronic.com

Positronic | Europe
Z.I. d'Engachies
46, route d'Engachies
F-32020 Auch Cedex 9 France

+33 5 6263 4491
contact@connectpositronic.com

Positronic | Asia
3014A Ubi RD 1 #07-01
Singapore 408703

+65 6842 1419
singapore@connectpositronic.com

Sales Offices
Positronic has local sales representation all over the world. To find the nearest sales office, please visit **www.connectpositronic.com/locations**

Mouser Electronics

Authorized Distributor

Click to View Pricing, Inventory, Delivery & Lifecycle Information:

Positronic:

GAPL41M0NSS0LB/AA GM26MSCE100J0/AA GM41MDS3N000V/AA GMCT104F0N0000/AA GMCT34F00PAZ0/AA GMCT34F0TR000/AA GMCT34F0TUA00/AA GMCT41M0N000VL/AA GMCT42F000000/AA GMCT42F0TRE00/AA GMCT50M00P0I0/AA GMCT50M0G0000/AA GMCT9F0ELP000/AA GAP34MDS6TP000/AA GMCT18F0TUA0B GMCT50M0N0000/AA GMCT66F00PAZ0 GMCT9M0TW000 VMCT34F0NSSR0J0/AA GAPL20M000LB/AA GM20FDS5T0000/AA GM21MSC00000/AA GMCT104F0TPB00/AA GMCT14F0TUB00/AA GMCT20F0TU000/AA GMCT34M00R0Y0/AA GMCT42F00PEY0/AA GMCT50F0000YC/AA GMCT50M00P0Z0/AA GMCT75F00RB00/AA GMCT9F0E100J0/AA GAP26MDS3T0000/AA GAPL20M0G0LB/AA GAPL20M0TRALB GM20FSC000J0/AA GM21FSCT0000/AA GM9FSCNSS00J0/AA GMCT104F0TH000/AA GMCT14F0TRA00/AA GMCT18F0E100L0/AA GMCT20M00RB00/AA GMCT20M0E0000/AA GMCT26F0E1P0JC/AA GMCT26M000000/AA GMCT34M0N000VL/AA GMCT42F0000Y0/AA GMCT50M00PFY0/AA GMCT75F00RA00/AA GMCT75F0TUA0B/AA GMCT9M0ESS0000/AA GAP9MDS5N0000 GAP9MDS6T0000 GMCT26M0NSS0000/AA GMCT50M0ESS0000/AA GAPL50F0N00/AA GM14FSCNSS00J0/AA GM14MSCE0000/AA GM20FSCT0000/AA GM26FSCN00JVL/AA GM41MDS5G000V/AA GMCT104F00PAZ0/AA GMCT104F00RAZ0/AA GMCT14M0E1PBJ0/AA GMCT20F000000/AA GMCT34M00P0V0/AA GMCT41F0N0000/AA GMCT41M0EL0000/AA GMCT42F0TUA00/AA GMCT50M0TUA00/AA VMCT34F000000/AA GMCT34M00P0I0 GMCT34M0NSS0000/AA GMCT66F0TP000/AA GAP26MDS600000/AA GM21FSCN0000/AA GM41FDS6T0000/AA GMCT104F0NR000/AA GMCT104M00RAZ0/AA GMCT104M0EPA00/AA GMCT18M0000J0/AA GMCT26F0N00J0/AA GMCT34M00R0Z0/AA GMCT34M0NPFJ0/AA GMCT42F0NR000/AA GMCT50M00PAY30/AA GMCT50M00R0Y0/AA GMCT9M0E1PAL0/AA GMCT9M0TH000/AA GM18FSCTRA00/AA GMCT26F0ESS0000/AA GMCT50F0TUC00/AA GMCT66M0TW000/AA GAP9MDS6TP000/AA GMCT14F0E100L0/AA GMCT18F0TRA00/AA GMCT26F0NSS0000/AA GMCT75F0TU000 GAP20MDS6T0000/AA GAP9MDS4TPD0B/AA GAPL9F0NSS0LB/AA